FCL-9 Rev.08/09

ADDENDUM TO BID

Jennifer K. Kelley
Senior Purchasing Officer
jkk1011@adp.uchc.edu
Email Address
860-679-1988
Telephone Number

UNIVERSITY OF CONNECTICUT HEALTH CENTER
FACILITY CONTRACTS & LEASES
263 Farmington Avenue, MC4039
Farmington, CT 06032

Bid Number
FCL-02-00111

Bid Due Date:
February 17, 2010

Bid: FCL-02-00111
Addendum Number: 2
Title: Cooling Coil Replacement
For: The University of Connecticut Health Center

Bidders Note:

Please incorporate the attached information into your bid specification package.

Q: The specifications (Section 230593 Paragraph 3.3 – G & H) on page 230593-6 indicate all operating modes of the units should be tested with detailed test procedures and documentation. Is this what the hospital wants on this project? If so there are substantial costs associated with this work. The alternative would be to test only the controls directly affected by the replacement of the cooling coils i.e. the control valves, low temperature detectors and temperature sensors which are removed and reinstalled during the project.

A: See attached document entitled "SECTION 230593 - TESTING, ADJUSTING, AND BALANCING FOR HVAC"

Q: During the walk thru, it was stated that Victaulic piping with Roustabout fitting connection to the mains was acceptable piping method. However, the spec mentions only threaded up to 2" and welded over 2.5". It was our understanding that Victaulic was acceptable throughout.

A: Correct. Victaulic is acceptable throughout.

Q: 230719-10 - 3.4 paragraph B, Addendum 1, dated 2/11/2010 states insulation to existing valves that are not presently insulated. Owner to identify which valves to be insulated. If that's the case how many, what size of valves need to be insulated?

A: Two valves in Blower #7, 5-6", need to be insulated.

Also attached please information on each of the coils to be provided by USA Coil.

Also attached please find the signature page from the Bid Form, which was omitted from the specification book.

All other terms & conditions remain unchanged.
End of Addendum

This Addendum must be *Signed & Returned* with your bid.

_____ _____
Authorized Signature of Bidder Company Name

Approved _____
Jennifer K. Kelley
Purchasing Services Officer
(Original signature on file in Facility Contract & Leases)

Dated Issued: February 16, 2010

SECTION 230593 - TESTING, ADJUSTING, AND BALANCING FOR HVAC

PART 1 - GENERAL

1.1 RELATED DOCUMENTS

A. Drawings and general provisions of the Contract, including General and Supplementary Conditions and Division 01 Specification Sections, apply to this Section.

1.2 SUMMARY

A. Section includes testing and balancing process requirements for HVAC&R systems, assemblies, and equipment.

B. Related Sections:

1. Division 01 Section "General Commissioning Requirements" for general commissioning process requirements.

C. Section Includes:

1. Balancing Air Systems:

   a. Constant-volume air systems.
   b. Variable-air-volume systems.

2. Balancing Hydronic Piping Systems:

   a. Constant-flow hydronic systems.
   b. Variable-flow hydronic systems.
   ~~c.Primary-secondary hydronic systems.~~

1.3 DEFINITIONS

A. AABC: Associated Air Balance Council.

B. NEBB: National Environmental Balancing Bureau.

C. TAB: Testing, adjusting, and balancing.

D. TABB: Testing, Adjusting, and Balancing Bureau.

E. TAB Specialist: An entity engaged to perform TAB Work.

F. HVAC&R: Heating, Ventilating, Air Conditioning, and Refrigeration.

G. Systems, Subsystems, Equipment, and Components: Where these terms are used together or separately, they shall mean "as-built" systems, subsystems, equipment, and components.

1.4 CONTRACTOR'S RESPONSIBILITIES

A. Perform testing and balancing tests.

B. Attend testing, adjusting, and balancing review and coordination meeting.

C. Perform HVAC&R systems, assemblies, equipment, and component maintenance orientation and inspection.

D. Provide information for final documentation.

E. Provide measuring instruments and logging devices to record test data, and provide data acquisition equipment to record data for the complete range of testing for the required test period.

1.5 SUBMITTALS

A. Qualification Data: Within 7 days of Contractor's Notice to Proceed, submit documentation that the TAB contractor and this Project's TAB team members meet the qualifications specified in "Quality Assurance" Article.

B. Contract Documents Examination Report: Within 7 days of Contractor's Notice to Proceed, submit the Contract Documents review report as specified in Part 3.

C. Strategies and Procedures Plan: Within 60 days of Contractor's Notice to Proceed, submit TAB strategies and step-by-step procedures as specified in "Preparation" Article.

D. Certified TAB reports.

E. Sample report forms.

F. Instrument calibration reports, to include the following:

1. Instrument type and make.
2. Serial number.
3. Application.
4. Dates of use.
5. Dates of calibration.

1.6 QUALITY ASSURANCE

A. TAB Contractor Qualifications: Engage a TAB entity certified by AABC or NEBB.

1. TAB Field Supervisor: Employee of the TAB contractor and certified by AABC or NEBB.
2. TAB Technician: Employee of the TAB contractor and who is certified by AABC or NEBB as a TAB technician.

B. TAB Conference: Meet with Owner on approval of the TAB strategies and procedures plan to develop a mutual understanding of the details. Require the participation of the TAB field supervisor and technicians. Provide seven days' advance notice of scheduled meeting time and location.

1. Agenda Items:

a. The Contract Documents examination report.
b. The TAB plan.
c. Coordination and cooperation of trades and subcontractors.
d. Coordination of documentation and communication flow. Plan for delivery and review of submittals, systems manuals, and other documents and reports.
e. Identification of installed systems, assemblies, equipment, and components including design changes that occurred during the construction phase.
f. Process and schedule for completing construction checklists and prestart and startup checklists for HVAC&R systems, assemblies, equipment, and components to be verified and tested.
g. Certificate of completion certifying that installation, prestart checks, and startup procedures have been completed.
h. Certificate of readiness certifying that HVAC&R systems, subsystems, equipment, and associated controls are ready for testing.
i. Test and inspection reports and certificates.
j. Corrective action documents.
k. Verification of testing, adjusting, and balancing reports.

C. Certify TAB field data reports and perform the following:

1. Review field data reports to validate accuracy of data and to prepare certified TAB reports.
2. Certify that the TAB team complied with the approved TAB plan and the procedures specified and referenced in this Specification.

D. TAB Report Forms: Use standard TAB contractor's forms approved by Architect.

E. Instrumentation Type, Quantity, Accuracy, and Calibration: As described in ASHRAE 111, Section 5, "Instrumentation."

1.7 PROJECT CONDITIONS

A. Full Owner Occupancy: Owner will occupy the site and existing building during entire TAB period. Cooperate with Owner during TAB operations to minimize conflicts with Owner's operations.

~~B.Partial Owner Occupancy: Owner may occupy completed areas of building before Substantial Completion. Cooperate with Owner during TAB operations to minimize conflicts with Owner's operations.~~

1.8 COORDINATION

A. Notice: Provide seven days' advance notice for each test. Include scheduled test dates and times.

B. Perform TAB after leakage and pressure tests on air and water distribution systems have been satisfactorily completed.

PART 2 - PRODUCTS (Not Applicable)

PART 3 - EXECUTION

3.1 EXAMINATION

A. Examine the Contract Documents to become familiar with Project requirements and to discover conditions in systems' designs that may preclude proper TAB of systems and equipment.

B. Examine systems for installed balancing devices, such as test ports, gage cocks, thermometer wells, flow-control devices, balancing valves and fittings, and manual volume dampers. Verify that locations of these balancing devices are accessible.

C. Examine the approved submittals for HVAC systems and equipment.

D. Examine design data including HVAC system descriptions, statements of design assumptions for environmental conditions and systems' output, and statements of philosophies and assumptions about HVAC system and equipment controls.

E. Examine system and equipment installations and verify that field quality-control testing, cleaning, and adjusting specified in individual Sections have been performed.

F. Examine test reports specified in individual system and equipment Sections.

G. Examine strainers. Verify that startup screens are replaced by permanent screens with indicated perforations.

H. Examine heat-transfer coils for correct piping connections and for clean and straight fins.

~~I.Examine system pumps to ensure absence of entrained air in the suction piping.~~

~~J.~~I. Examine operating safety interlocks and controls on HVAC equipment.

~~K.~~J. Report deficiencies discovered before and during performance of TAB procedures. Observe and record system reactions to changes in conditions. Record default set points if different from indicated values.

3.2 PREPARATION

A. Prepare a TAB plan that includes strategies and step-by-step procedures.

B. Pipe system cleaning, flushing, hydrostatic tests, and chemical treatment requirements are specified in Division 23 piping Sections. HVAC&R Contractor shall prepare a pipe system cleaning, flushing, and hydrostatic testing plan. Provide cleaning, flushing, testing, and treating plan and final reports to the Owner. Plan shall include the following:

1. Sequence of testing and testing procedures for each section of pipe to be tested, identified by pipe zone or sector identification marker. Markers shall be keyed to Drawings for each pipe sector, showing the physical location of each designated pipe test section. Drawings keyed to pipe zones or sectors shall be formatted to allow each section of piping to be physically located and identified when referred to in pipe system cleaning, flushing, hydrostatic testing, and chemical treatment plan.
2. Description of equipment for flushing operations.
3. Minimum flushing water velocity.
4. Tracking checklist for managing and ensuring that all pipe sections have been cleaned, flushed, hydrostatically tested, and chemically treated.

C. Complete system-readiness checks and prepare reports. Verify the following:

1. Permanent electrical-power wiring is complete.
2. Hydronic systems are filled, clean, and free of air.
3. Automatic temperature-control systems are operational.
4. Isolating and balancing valves are open and control valves are operational.

D. Certify that HVAC&R systems, subsystems, and equipment have been installed, calibrated, and started and are operating according to the Contract Documents.

E. Certify that HVAC&R instrumentation and control systems have been completed and calibrated, that they are operating according to the Contract Documents, and that pretest set points have been recorded.

F. Certify that testing, adjusting, and balancing procedures have been completed and that testing, adjusting, and balancing reports have been submitted, discrepancies corrected, and corrective work approved.

G. Set systems, subsystems, and equipment into operating mode to be tested (e.g., normal shutdown, normal auto position, normal manual position, unoccupied cycle, emergency power, and alarm conditions).

H. Inspect and verify the position of each device and interlock identified on checklists.

I. Check safety cutouts, alarms, and interlocks with smoke control and life-safety systems during each mode of operation.

J. Testing Instrumentation: Install measuring instruments and logging devices to record test data .

3.3 GENERAL PROCEDURES FOR TESTING AND BALANCING

A. Perform testing and balancing procedures on each system according to the procedures contained in AABC's "National Standards for Total System Balance" or NEBB's "Procedural Standards for Testing, Adjusting, and Balancing of Environmental Systems" and in this Section.

B. Cut insulation, pipes for installation of test probes to the minimum extent necessary for TAB procedures.
   1. Install and join new insulation that matches removed materials. Restore insulation, coverings, vapor barrier, and finish according to Division 23 Section "HVAC Insulation."

C. Mark equipment and balancing devices, including valve position indicators, and similar controls and devices, with paint or other suitable, permanent identification material to show final settings.

D. Take and report testing and balancing measurements in inch-pound (IP) units.

E. Provide technicians, instrumentation, and tools to perform test. .

F. Scope of HVAC&R testing shall include entire HVAC&R installation. Testing shall include measuring capacities and effectiveness of operational and control functions.

G. Test all operating modes, interlocks, control responses, and responses to abnormal or emergency conditions, and verify proper response of building automation system controllers and sensors.

H. HVAC&R Contractor, testing and balancing Contractor, and HVAC&R Instrumentation and Control Contractor shall prepare detailed testing plans, procedures, and checklists for HVAC&R systems, subsystems, and equipment.

I. Tests will be performed using design conditions whenever possible.

J. Alter points when simulating conditions is not practical.

K. Alter sensor values with a signal generator when design or simulating conditions and altering set points are not practical.

L. If tests cannot be completed because of a deficiency outside the scope of the HVAC&R system, document the deficiency and report it to the Owner. After deficiencies are resolved, reschedule tests.

M. ~~If the~~This testing plan ~~indicates~~ requires specific seasonal testing~~,~~. ~~complete~~Complete appropriate initial performance tests and schedule additional seasonal tests to verify both cooling and heating performance.~~and documentation and schedule seasonal tests~~.

3.4 TESTING AND BALANCING VERIFICATION

A. Prior to performance of testing and balancing Work, provide copies of reports, sample forms, checklists, and certificates to the Owner.

B. Notify the Owner at least 7 days in advance of testing and balancing Work, and provide access for the Owner to witness testing and balancing Work.

C. Provide technicians, instrumentation, and tools to verify testing and balancing of HVAC&R systems.
   1. Failure of an item includes a deviation of more than 10 percent. Failure of more than 10 percent of selected items shall result in rejection of final testing, adjusting, and balancing report.
   2. Remedy the deficiency and notify the Owner so verification of failed portions can be performed.

~~3.5PROCEDURES FOR CONSTANT-FLOW HYDRONIC SYSTEMS~~

~~A.Measure water flow at pumps. Use the following procedures except for positive-displacement pumps:~~

~~1.Verify impeller size by operating the pump with the discharge valve closed. Read pressure differential across the pump. Convert pressure to head and correct for differences in gage heights. Note the point on manufacturer's pump curve at zero flow and verify that the pump has the intended impeller size.~~

~~a.If impeller sizes must be adjusted to achieve pump performance, obtain approval from Owner and comply with requirements in Division 23 Section "Hydronic Pumps."~~

~~2.Check system resistance. With all valves open, read pressure differential across the pump and mark pump manufacturer's head-capacity curve. Adjust pump discharge valve until indicated water flow is achieved.~~

~~a.Monitor motor performance during procedures and do not operate motors in overload conditions.~~

~~3.Verify pump motor brake horsepower. Calculate the intended brake horsepower for the system based on pump manufacturer's performance data. Compare calculated brake horsepower with nameplate data on the pump motor. Report conditions where actual amperage exceeds motor nameplate amperage.~~

~~4.Report flow rates that are not within plus or minus 10 percent of design.~~

~~B.Measure flow at all automatic flow control valves to verify that valves are functioning as designed.~~

~~C.Measure flow at all pressure-independent characterized control valves, with valves in fully open position, to verify that valves are functioning as designed.~~

~~D.Set calibrated balancing valves, if installed, at calculated presettings.~~

~~E.Measure flow at all stations and adjust, where necessary, to obtain first balance.~~

~~1.System components that have Cv rating or an accurately cataloged flow-pressure-drop relationship may be used as a flow-indicating device.~~

~~F.Measure flow at main balancing station and set main balancing device to achieve flow that is 5 percent greater than indicated flow.~~

~~G.Adjust balancing stations to within specified tolerances of indicated flow rate as follows:~~

~~1.Determine the balancing station with the highest percentage over indicated flow.~~
~~2.Adjust each station in turn, beginning with the station with the highest percentage over indicated flow and proceeding to the station with the lowest percentage over indicated flow.~~
~~3.Record settings and mark balancing devices.~~

~~H.Measure pump flow rate and make final measurements of pump amperage, voltage, rpm, pump heads, and systems' pressures and temperatures including outdoor air temperature.~~

~~I.Measure the differential-pressure-control-valve settings existing at the conclusion of balancing.~~

~~J.Check settings and operation of each safety valve. Record settings.~~

~~3.6~~3.5 PROCEDURES FOR VARIABLE-FLOW HYDRONIC SYSTEMS

A. Balance systems with automatic ~~two- and three-way~~ control valves by setting systems at maximum flow through ~~heat-exchange terminals~~hydronic coils and proceed as specified ~~above for hydronic systems~~below.

B. Measure flow at all automatic flow control valves to verify that valves are functioning as designed.

C. Measure flow at all pressure-independent characterized control valves, with valves in fully open position, to verify that valves are functioning as designed.

D. Set calibrated balancing valves, if installed, at specified presettings.

E. Measure flow at all stations and adjust, where necessary, to obtain first balance.

1. System components that have Cv rating or an accurately cataloged flow-pressure-drop relationship may be used as a flow-indicating device.

~~3.7PROCEDURES FOR PRIMARY-SECONDARY HYDRONIC SYSTEMS~~

~~A.Balance the primary circuit flow first and then balance the secondary circuits.~~

~~3.8~~3.6 PROCEDURES FOR HEAT-TRANSFER COILS

A. Measure, adjust, and record the following data for each water coil:

1. Entering- and leaving-water temperature.
2. Water flow rate.
3. Water pressure drop.
4. Dry-bulb temperature of entering and leaving air.
5. Wet-bulb temperature of entering and leaving air for cooling coils.
6. Airflow.
7. Air pressure drop.

~~3.9~~3.7 PROCEDURES FOR TESTING, ADJUSTING, AND BALANCING EXISTING SYSTEMS

A. Perform a preconstruction inspection of existing ~~equipment~~ Air Handlers affected by this work that is to remain and be reused.

1. Measure and record the operating speed, airflow, and static pressure of each fan.
2. Measure motor voltage and amperage. Compare the values to motor nameplate information.
3. Check the condition of coils.
4. Check the condition of air filters.
~~4.~~5. Check the operation of the drain pan and condensate-drain trap.
6. Check the condition of the new Blower casing.
~~5.~~7. Report on the operating condition of the equipment and the results of the measurements taken. Report deficiencies.

B. Before performing testing and balancing of existing systems, inspect existing equipment that is to remain and be reused to verify that existing equipment has been cleaned and refurbished. Verify the following:

1. Casing is secure and sealed.
~~1.~~2. Coils are clean and fins combed.
~~2.~~3. Drain pans are clean.
~~3.~~4. Deficiencies noted in the preconstruction report are corrected.

C. Perform testing and balancing of existing systems to the extent that existing systems are affected by the renovation work.

1. Compare the ~~indicated~~ airflow specified in original design documents of the renovated work to the measured fan airflows, and determine the new fan speed ~~and the face velocity of filters and coils~~.

2. Adjust fan speeds to achieve indicated airflows. Monitor motor amperage and/or VSD frequency while re-balancing systems. Do not exceed motor name plate speed or amperage.
~~2.~~3. Verify that the indicated airflows of the renovated work result in filter and coil face velocities and fan speeds that are within the acceptable limits defined by equipment manufacturer.
~~3.~~4. If calculations ~~increase or decrease~~ the air flow rates increase or decrease ~~and water flow rates~~ by more than 5 percent, make equipment adjustments to achieve the calculated rates. If increase or decrease is 5 percent or less, equipment adjustments are not required.
5. Verify that drain pans are clean and pitched to properly convey condensate to drains.

~~3.10~~3.8 TOLERANCES

A. Set HVAC system's air flow rates and water flow rates within the following tolerances:
1. Cooling-Water Flow Rate: Plus or minus 5 percent.
2. Air Flow Rate: Plus or minus 5 percent.

~~3.11~~3.9 REPORTING

A. Initial Construction-Phase Report: Based on examination of the Contract Documents as specified in "Examination" Article, prepare a report on the adequacy of design for systems' balancing devices. Recommend changes and additions to systems' balancing devices to facilitate proper performance measuring and balancing. Recommend changes and additions to HVAC systems and general construction to allow access for performance measuring and balancing devices.

B. Status Reports: Prepare weekly progress reports to describe completed procedures, procedures in progress, and scheduled procedures. Include a list of deficiencies and problems found in systems being tested and balanced. Prepare a separate report for each system and each building floor for systems serving multiple floors.

~~3.12~~3.10 FINAL REPORT

A. General: Prepare a certified written report; tabulate and divide the report into separate sections for tested systems and balanced systems.

1. Include a certification sheet at the front of the report's binder, signed and sealed by the certified testing and balancing engineer.
2. Include a list of instruments used for procedures, along with proof of calibration.

B. Final Report Contents: In addition to certified field-report data, include the following:

1. Manufacturers' test data.
2. Field test reports prepared by system and equipment installers.
3. Other information relative to equipment performance; do not include Shop Drawings and product data.

C. General Report Data: In addition to form titles and entries, include the following data:

1. Title page.
2. Name and address of the TAB contractor.
3. Project name.
4. Project location.

~~5.Architect's name and address.~~

~~6.~~5. Engineer's name and address.

~~7.~~6. Contractor's name and address.

~~8.~~7. Report date.

~~9.~~8. Signature of TAB supervisor who certifies the report.

~~10.~~9. Table of Contents with the total number of pages defined for each section of the report. Number each page in the report.

~~11.~~10. Summary of contents including the following:

a. Indicated versus final performance.
b. Notable characteristics of systems.
c. Description of system operation sequence if it varies from the Contract Documents.

~~12.~~11. Nomenclature sheets for each item of equipment.

~~13.~~12. Notes to explain why certain final data in the body of reports vary from indicated values.

D. System Diagrams: Include schematic layouts of hydronic distribution systems. Present each system with single-line diagram and include the following:

1. Water flow rates.
2. Pipe and valve sizes and locations.
3. Balancing stations.
4. Position of balancing devices.

E. Air-Handling-Unit Test Reports: ~~For air-handling units with coils, i~~Include the following:

1. Test Data (Indicated and Actual Values):

a. Total Blower air flow rate in cfm.
b. Total system static pressure in inches wg.
c. Fan rpm.
d. Discharge static pressure in inches wg.
e. Filter static-pressure differential in inches wg.
f. Electric ~~P~~preheat-coil static-pressure differential in inches wg.
g. Cooling-coil static-pressure differential in inches wg.
h. Reh~~H~~eating-coil static-pressure differential in inches wg (if present)~~.~~

~~i.Outdoor airflow in cfm.~~

~~j.Return airflow in cfm.~~

~~k.~~i. Outdoor-air damper position.

~~l.~~j. Return-air damper position.

k. Return air fan discharge static pressure.

F. Apparatus-Coil Test Reports:

1. Coil Data:

a. System identification.
b. Location.
c. Coil type.
d. Number of rows.
e. Fin spacing in fins per inch o.c.
f. Make and model number.
g. Face area in sq. ft..
h. Tube size in NPS.
i. Tube and fin materials.
j. Circuiting arrangement.

2. Test Data (Indicated and Actual Values):

a. Blower ~~A~~air flow rate in cfm.
b. Average face velocity in fpm.
c. Air pressure drop in inches wg.
d. Outdoor-air, wet- and dry-bulb temperatures in deg F.
e. Return-air, wet- and dry-bulb temperatures in deg F.
f. Entering-air, wet- and dry-bulb temperatures for each coil in deg F.
g. Leaving-air, wet- and dry-bulb temperatures for each coil in deg F.
h. Water flow rate in gpm.
i. Water pressure differential for each coil in feet of head or psig.
j. Water pressure differential between common supply and return headers in feet of head or psig.
~~j.~~k. Entering-water temperature for each coil in deg F.
~~k.~~l. Leaving-water temperature for each coil in deg F.

G. Instrument Calibration Reports:

1. Report Data:

a. Instrument type and make.
b. Serial number.
c. Application.
d. Dates of use.
e. Dates of calibration.

~~3.13~~3.11 INSPECTIONS

A. Initial Inspection:

1. After testing and balancing are complete, operate each system and randomly check measurements to verify that the system is operating according to the final test and balance readings documented in the final report.

2. Check the following for each system:

   a. Measure water flow of each coil.
   b. Verify that balancing devices are marked with final balance position.
   c. Note deviations from the Contract Documents in the final report.

B. Final Inspection:

1. After initial inspection is complete and documentation by random checks verifies that testing and balancing are complete and accurately documented in the final report, request that a final inspection be made by Owner.
2. The TAB contractor's test and balance engineer shall conduct the inspection in the presence of Owner.
3. Owner shall randomly select measurements, documented in the final report, to be rechecked. Rechecking shall be limited to either 10 percent of the total measurements recorded or the extent of measurements that can be accomplished in a normal 8-hour business day.
4. If rechecks yield measurements that differ from the measurements documented in the final report by more than the tolerances allowed, the measurements shall be noted as "FAILED."
5. If the number of "FAILED" measurements is greater than 10 percent of the total measurements checked during the final inspection, the testing and balancing shall be considered incomplete and shall be rejected.

C. TAB Work will be considered defective if it does not pass final inspections. If TAB Work fails, proceed as follows:

1. Recheck all measurements and make adjustments. Revise the final report and balancing device settings to include all changes; resubmit the final report and request a second final inspection.
2. If the second final inspection also fails, Owner may contract the services of another TAB contractor to complete TAB Work according to the Contract Documents and deduct the cost of the services from the original TAB contractor's final payment.

D. Prepare test and inspection reports.

~~3.14~~3.12 ADDITIONAL TESTS

A. Within 90 days of completing TAB, perform additional TAB to verify that balanced conditions are being maintained throughout and to correct unusual conditions.

B. Seasonal Periods: If initial TAB procedures were not performed during near-peak summer and winter conditions, perform additional TAB during near-peak summer and winter conditions.

END OF SECTION 230593
~~02/04/10~~
02/11/10

Fluid Selection Program
Version 3.4.3 TH

General Information

Project Name	:	UConn Health Center -
Coil Item No.	:	1
Coil Tag	:	Blower 58
Date	:	02/03/2010 09:07:04
Model No	:	CW58FK04602400008R

Coil Construction

Coils/Bank	:	1	
Fin Type	:	58 1.50 x 1.3 Waffle	
Fin Height	:	24	inch
Fin'd Length	:	46	inch
Rows Deep	:	6	
Fins/Inch	:	10	
Circuiting	:	Half	
Tube Material	:	Copper	
Tube Thick	:	0.025	inch
Fin Material	:	Aluminum	
Fin Thick	:	0.0060	inch
Allow OppEnd	:	No	

Airside

Airflow	:	3430	SCFM
Altitude	:	0	Feet
Ent. DB/WB	:	95.0 / 75.0	°F
Cap Req'd	:		Btu/Hr
LDB/LWB Req'd	:	/	°F

Fluid Side

Fluid	:	Water	
Ent Fluid Temp	:	45	°F
Lvg FLuid Temp	:	57	°F
Fluid Flow Rate	:		GPM

Coil Performance

Model No.	:	CW58FK04602400008R	
Rows / FPI	:	6 / 10	
Circuiting	:	Half	
Total Cap	:	218,981	Btu/Hr
Sens Cap	:	140,239	Btu/Hr
Lvg DB/WB	:	57.6 / 56.6	°F
Face Velocity	:	447.4	SFPM
Standard APD	:	0.62	in. w.c.
Lvg Fluid	:	56.3	°F
Fluid Flow	:	38.6	GPM
Fluid PD	:	17.77	ft H2O
Fluid Velocity	:	5.46	FPS
Conn Size	:	(1) 2.00"	
Dry Weight	:	176	Lbs

Additional Construction Notes

Coil Coating	:	None
Casing Mat'l	:	Galvanized Steel
Casing Type	:	Flanged
Conn. Mat'l	:	Copper
Conn. Type	:	MPT

Special Notes:

Coil Certified and Rated in Accordance with ARI Standard 410.

PO Box 578 * Devault, PA 19432 * PH:(800)USA-COIL
PH:(610)296-9668 * Fax:(610)296-9763 * Email: sales@usacoil.com * www.usacoil.com

Fluid Selection Program
Version 3.4.3 TH

General Information

Project Name	:	UConn Health Center -
Coil Item No.	:	1
Coil Tag	:	Blower 58
Date	:	02/03/2010 09:07:04
Model No	:	CW58FK04602400008R SG

Coil Construction

Fin Type	:	58 1.50 x 1.3 Waffle	Coil Coating	:	None
Rows	:	6	Casing Mat'l	:	Galvanized Steel
FPI	:	10	Casing Type	:	Flanged
Tube Material	:	Copper	Connections	:	Copper MPT
Tube Thick	:	0.025 inch	Circuiting	:	Half
Fin Material	:	Aluminum			
Fin Thick	:	0.0060 inch			

Coil Dimensions

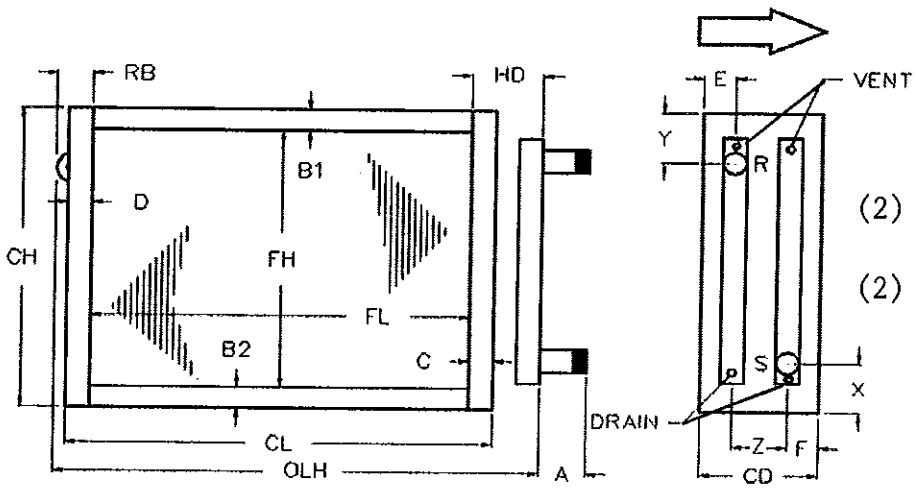

(2) 1/2" fpt vents

(2) 1/2" fpt drains

FH	FL	CH	CL	CD	HD	OLH	A	X	F
24.00	46.00	27.00	56.00	12.50	5.13	56.00	8.00	3.25	2.50
Y	E	C	D	B1	B2	RB	Z	Supply	Return
3.25	2.50	6.50	3.50	1.50	1.50	3.50	7.50	2.00	2.00
Drawing									
WTRRHSTD									

Special Notes:

PO Box 578 * Devault, PA 19432 * PH:(800)USA-COIL
PH:(610)296-9668 * Fax:(610)296-9763 * Email: sales@usacoil.com * www.usacoil.com

Fluid Selection Program
Version 3.4.3 TH

General Information

Project Name	:	UConn Health Center -
Coil Item No.	:	1
Coil Tag	:	Blower 63
Date	:	02/03/2010 08:45:24
Model No	:	CW58KJ11153000033L SG

Coil Construction

Fin Type	:	58 1.50 x 1.3 Waffle	Coil Coating	:	None
Rows	:	10	Casing Mat'l	:	Galvanized Steel
FPI	:	9	Casing Type	:	Flanged
Tube Material	:	Copper	Connections	:	Copper MPT
Tube Thick	:	0.025 inch	Circuiting	:	Custom (33 Feeds)
Fin Material	:	Aluminum			
Fin Thick	:	0.0060 inch			

Coil Dimensions

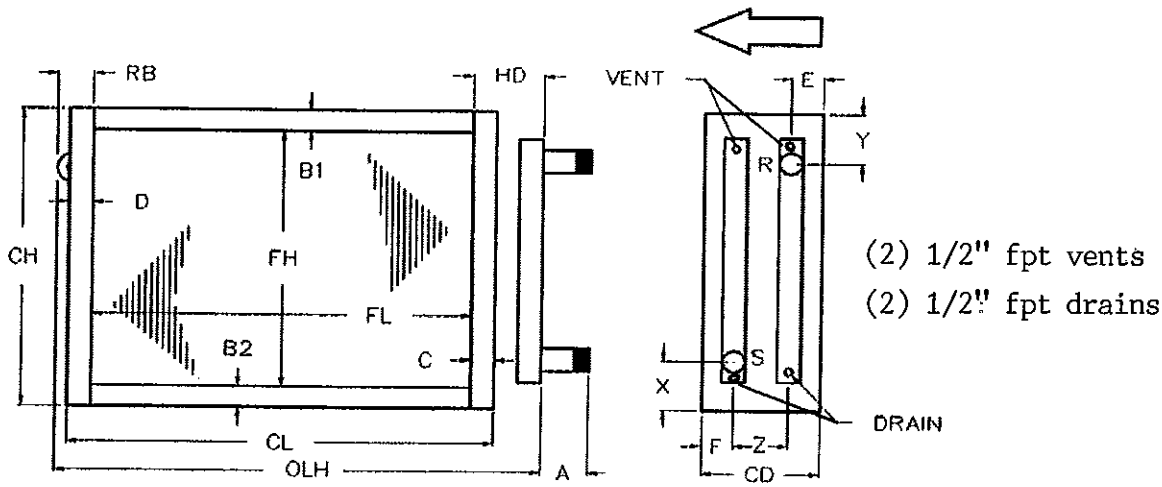

FH	FL	CH	CL	CD	HD	OLH	A	X	F
30.00	111.50	32.00	118.00	15.00	5.63	122.00	8.00	3.25	1.65
Y	E	C	D	B1	B2	RB	Z	Supply	Return
3.25	1.65	3.00	3.50	1.00	1.00	3.50	11.69	2.50	2.50
Drawing									
WTRLHSTD									

Special Notes:

PO Box 578 * Devault, PA 19432 * PH:(800)USA-COIL
PH:(610)296-9668 * Fax:(610)296-9763 * Email: sales@usacoil.com * www.usacoil.com

Fluid Selection Program
Version 3.4.3 TH

General Information

Project Name	:	UConn Health Center -
Coil Item No.	:	1
Coil Tag	:	Blower 63
Date	:	02/05/2010 08:36:29
Model No	:	CW58KJ11153000033L

Coil Construction

Coils/Bank	:	3	
Fin Type	:	58 1.50 x 1.3 Waffle	
Fin Height	:	30	inch
Fin'd Length	:	111.5	inch
Rows Deep	:	10	
Fins/Inch	:	9	
Circuiting	:	Custom (33 Feeds)	
Tube Material	:	Copper	
Tube Thick	:	0.025	inch
Fin Material	:	Aluminum	
Fin Thick	:	0.0060	inch
Allow OppEnd	:	No	

Airside

Airflow	:	36510	SCFM
Altitude	:	0	Feet
Ent. DB/WB	:	87.0 / 70.0	°F
Cap Req'd	:		Btu/Hr
LDB/LWB Req'd	:	/	°F

Fluid Side

Fluid	:	Water	
Ent Fluid Temp	:	45	°F
Lvg FLuid Temp	:	55	°F
Fluid Flow Rate	:		GPM

Coil Performance

Model No.	:	CW58KJ11153000033L	
Rows / FPI	:	10 / 9	
Circuiting	:	Custom (33 Feeds)	
Total Cap	:	2,137,187	Btu/Hr
Sens Cap	:	1,421,374	Btu/Hr
Lvg DB/WB	:	51.4 / 51.2	°F
Face Velocity	:	523.9	SFPM
Standard APD	:	1.20	in. w.c.
Lvg Fluid	:	54.2	°F
Fluid Flow	:	461.9	GPM
Fluid PD	:	18.47	ft H2O
Fluid Velocity	:	5.28	FPS
Conn Size	:	(1) 3.00"	
Dry Weight	:	744	Lbs

Additional Construction Notes

Coil Coating	:	None
Casing Mat'l	:	Galvanized Steel
Casing Type	:	Flanged
Conn. Mat'l	:	Copper
Conn. Type	:	MPT

Special Notes:

Coil Rated in Conformance with ARI Standard 410.
Coil not within ARI Certified Directory.

PO Box 578 * Devault, PA 19432 * PH:(800)USA-COIL
PH:(610)296-9668 * Fax:(610)296-9763 * Email: sales@usacoil.com * www.usacoil.com

General Information

Project Name	:	UCONN Health Center -
Coil Item No.	:	1
Coil Tag	:	Blower 7 Right Hand
Date	:	01/21/2010 10:14:37
Model No	:	CW58HH07954500030R SG

Coil Construction

Coils/Bank	:	2	
Fin Type	:	58 1.50 x 1.3 Waffle	
Fin Height	:	45	inch
Fin'd Length	:	79.5	inch
Rows Deep	:	8	
Fins/Inch	:	8	
Circuiting	:	Single	
Tube Material	:	Copper	
Tube Thick	:	0.025	inch
Fin Material	:	Aluminum	
Fin Thick	:	0.0060	inch
Allow OppEnd	:	No	

Airside

Airflow	:	26885	SCFM
Altitude	:	0	Feet
Ent. DB/WB	:	82.3 / 66.8	°F
Cap Req'd	:		Btu/Hr
LDB/LWB Req'd	:	/	°F

Fluid Side

Fluid	:	Water	
Ent Fluid Temp	:	45	°F
Lvg FLuid Temp	:	55	°F
Fluid Flow Rate	:		GPM

Coil Performance

Model No.	:	CW58HH07954500030R	
Rows / FPI	:	8 / 8	
Circuiting	:	Single	
Total Cap	:	1,103,134	Btu/Hr
Sens Cap	:	827,120	Btu/Hr
Lvg DB/WB	:	54.2 / 53.4	°F
Face Velocity	:	541.1	SFPM
Standard APD	:	0.90	in. w.c.
Lvg Fluid	:	54.4	°F
Fluid Flow	:	234.1	GPM
Fluid PD	:	14.86	ft H2O
Fluid Velocity	:	4.41	FPS
Conn Size	:	(1) 2.50"	
Dry Weight	:	612	Lbs

Additional Construction Notes

Coil Coating	:	None
Casing Mat'l	:	Galvanized Steel
Casing Type	:	Flanged
Conn. Mat'l	:	Copper
Conn. Type	:	MPT

Special Notes:

Coil Certified and Rated in Accordance with ARI Standard 410.

Fluid Selection Program
Version 3.4.3 TH

General Information

Project Name	:	UCONN Health Center -
Coil Item No.	:	1
Coil Tag	:	Blower 7 Right Hand
Date	:	01/12/2010 13:35:32
Model No	:	CW58HH07954500030R SG

Coil Construction

Fin Type	:	58 1.50 x 1.3 Waffle	Coil Coating	:	None
Rows	:	8	Casing Mat'l	:	Galvanized Steel
FPI	:	8	Casing Type	:	Flanged
Tube Material	:	Copper	Connections	:	Copper MPT
Tube Thick	:	0.025 inch	Circuiting	:	Single
Fin Material	:	Aluminum			
Fin Thick	:	0.0060 inch			

Coil Dimensions

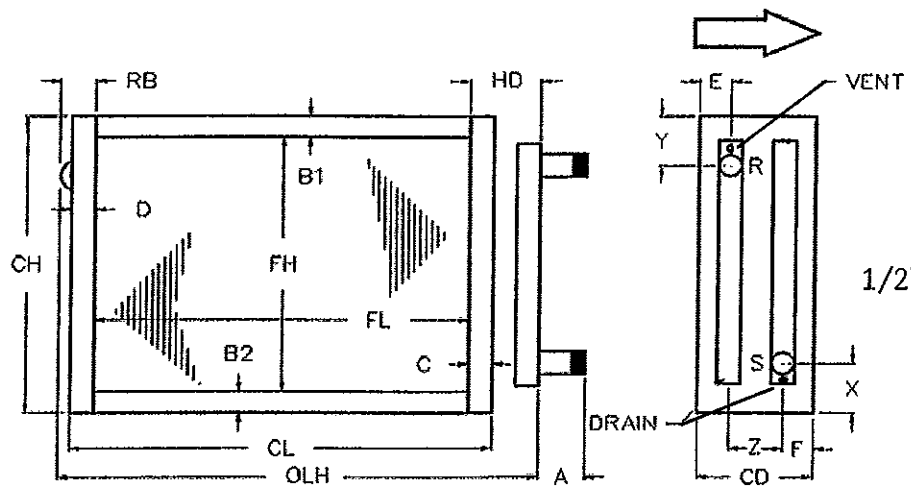

1/2" fpt vent & drain

FH	FL	CH	CL	CD	HD	OLH	A	X	F
45.00	79.50	47.00	87.00	12.00	5.63	90.00	8.00	3.00	1.45
Y	E	C	D	B1	B2	RB	Z	Supply	Return
3.00	1.45	4.00	3.50	1.00	1.00	3.50	9.09	2.50	2.50
Drawing									
WTRRHSTD									

Special Notes:

OLH dimension includes Sentry Guard plugs at both ends of coil

PO Box 578 * Devault, PA 19432 * PH:(800)USA-COIL
PH:(610)296-9668 * Fax:(610)296-9763 * Email: sales@usacoil.com * www.usacoil.com

General Information

Project Name	:	UCONN Health Center -
Coil Item No.	:	2
Coil Tag	:	Blower 7 Left Hand
Date	:	01/21/2010 10:14:17
Model No	:	CW58HH07954500030LSG

Coil Construction

Coils/Bank	:	2	
Fin Type	:	58 1.50 x 1.3 Waffle	
Fin Height	:	45	inch
Fin'd Length	:	79.5	inch
Rows Deep	:	8	
Fins/Inch	:	8	
Circuiting	:	Single	
Tube Material	:	Copper	
Tube Thick	:	0.025	inch
Fin Material	:	Aluminum	
Fin Thick	:	0.0060	inch
Allow OppEnd	:	No	

Airside

Airflow	:	26885	SCFM
Altitude	:	0	Feet
Ent. DB/WB	:	82.3 / 66.8	°F
Cap Req'd	:		Btu/Hr
LDB/LWB Req'd	:	/	°F

Fluid Side

Fluid	:	Water	
Ent Fluid Temp	:	45	°F
Lvg FLuid Temp	:	55	°F
Fluid Flow Rate	:		GPM

Coil Performance

Model No.	:	CW58HH07954500030L	
Rows / FPI	:	8 / 8	
Circuiting	:	Single	
Total Cap	:	1,103,134	Btu/Hr
Sens Cap	:	827,120	Btu/Hr
Lvg DB/WB	:	54.2 / 53.4	°F
Face Velocity	:	541.1	SFPM
Standard APD	:	0.90	in. w.c.
Lvg Fluid	:	54.4	°F
Fluid Flow	:	234.1	GPM
Fluid PD	:	14.86	ft H2O
Fluid Velocity	:	4.41	FPS
Conn Size	:	(1) 2.50"	
Dry Weight	:	612	Lbs

Additional Construction Notes

Coil Coating	:	None
Casing Mat'l	:	Galvanized Steel
Casing Type	:	Flanged
Conn. Mat'l	:	Copper
Conn. Type	:	MPT

Special Notes:

Coil Certified and Rated in Accordance with ARI Standard 410.

Fluid Selection Program
Version 3.4.3 TH

General Information

Project Name	:	UCONN Health Center -
Coil Item No.	:	2
Coil Tag	:	Blower 7 Left Hand
Date	:	01/12/2010 13:36:13
Model No	:	CW58HH07954500030L SG

Coil Construction

Fin Type	:	58 1.50 x 1.3 Waffle	Coil Coating	:	None
Rows	:	8	Casing Mat'l	:	Galvanized Steel
FPI	:	8	Casing Type	:	Flanged
Tube Material	:	Copper	Connections	:	Copper MPT
Tube Thick	:	0.025 inch	Circuiting	:	Single
Fin Material	:	Aluminum			
Fin Thick	:	0.0060 inch			

Coil Dimensions

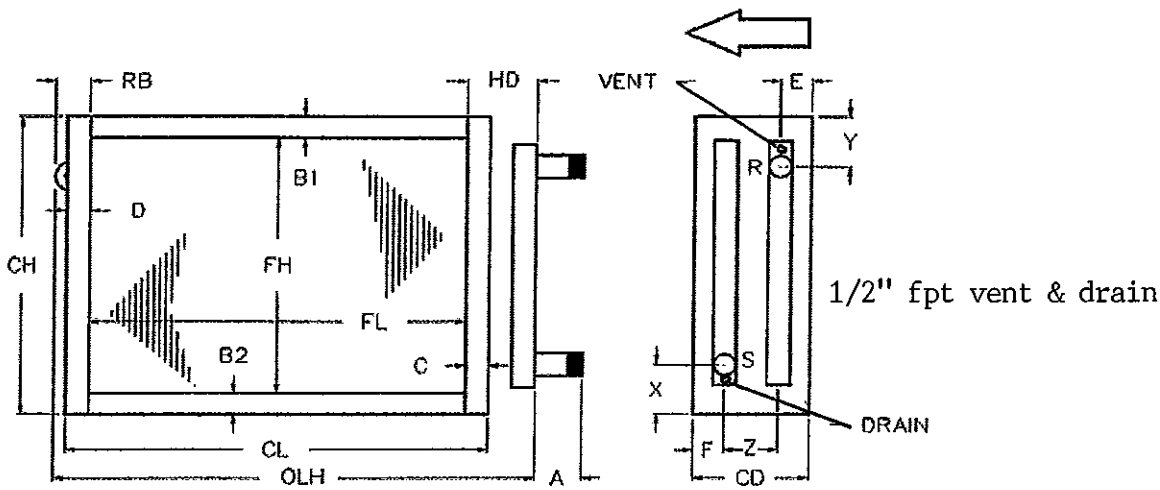

FH	FL	CH	CL	CD	HD	OLH	A	X	F
45.00	79.50	47.00	87.00	12.00	5.63	90.00	8.00	3.00	1.45
Y	E	C	D	B1	B2	RB	Z	Supply	Return
3.00	1.45	4.00	3.50	1.00	1.00	3.50	9.09	2.50	2.50
Drawing									
WTRLHSTD									

Special Notes:

OLH dimension includes Sentry Guard plugs at both ends of coil

PO Box 578 * Devault, PA 19432 * PH:(800)USA-COIL
PH:(610)296-9668 * Fax:(610)296-9763 * Email: sales@usacoil.com * www.usacoil.com

General Information

Project Name	:	UConn Health Center -
Coil Item No.	:	3
Coil Tag	:	Blower 47 Right Hand
Date	:	01/21/2010 11:13:52
Model No	:	CW58FH07803000020RSG

Coil Construction

Coils/Bank	:	4	
Fin Type	:	58 1.50 x 1.3 Waffle	
Fin Height	:	30	inch
Fin'd Length	:	78	inch
Rows Deep	:	6	
Fins/Inch	:	8	
Circuiting	:	Single	
Tube Material	:	Copper	
Tube Thick	:	0.025	inch
Fin Material	:	Aluminum	
Fin Thick	:	0.0060	inch
Allow OppEnd	:	No	

Airside

Airflow	:	28395	SCFM
Altitude	:	0	Feet
Ent. DB/WB	:	84.0 / 67.8	°F
Cap Req'd	:		Btu/Hr
LDB/LWB Req'd	:	/	°F

Fluid Side

Fluid	:	Water	
Ent Fluid Temp	:	45	°F
Lvg FLuid Temp	:	57	°F
Fluid Flow Rate	:		GPM

Coil Performance

Model No.	:	CW58FH07803000020R	
Rows / FPI	:	6 / 8	
Circuiting	:	Single	
Total Cap	:	1,038,153	Btu/Hr
Sens Cap	:	813,676	Btu/Hr
Lvg DB/WB	:	57.8 / 56.3	°F
Face Velocity	:	436.8	SFPM
Standard APD	:	0.46	in. w.c.
Lvg Fluid	:	56.3	°F
Fluid Flow	:	183.8	GPM
Fluid PD	:	4.59	ft H2O
Fluid Velocity	:	2.60	FPS
Conn Size	:	(1) 2.00"	
Dry Weight	:	320	Lbs

Additional Construction Notes

Coil Coating	:	None
Casing Mat'l	:	Galvanized Steel
Casing Type	:	Flanged
Conn. Mat'l	:	Copper
Conn. Type	:	MPT

Special Notes:

Coil Certified and Rated in Accordance with ARI Standard 410.

Fluid Selection Program
Version 3.4.3 TH

General Information

Project Name	:	UCONN Health Center -
Coil Item No.	:	3
Coil Tag	:	Blower 47 Right Hand
Date	:	01/12/2010 13:39:50
Model No	:	CW58FH078030000020R SG

Coil Construction

Fin Type	:	58 1.50 x 1.3 Waffle		Coil Coating	:	None
Rows	:	6		Casing Mat'l	:	Galvanized Steel
FPI	:	8		Casing Type	:	Flanged
Tube Material	:	Copper		Connections	:	Copper MPT
Tube Thick	:	0.025	inch	Circuiting	:	Single
Fin Material	:	Aluminum				
Fin Thick	:	0.0060	inch			

Coil Dimensions

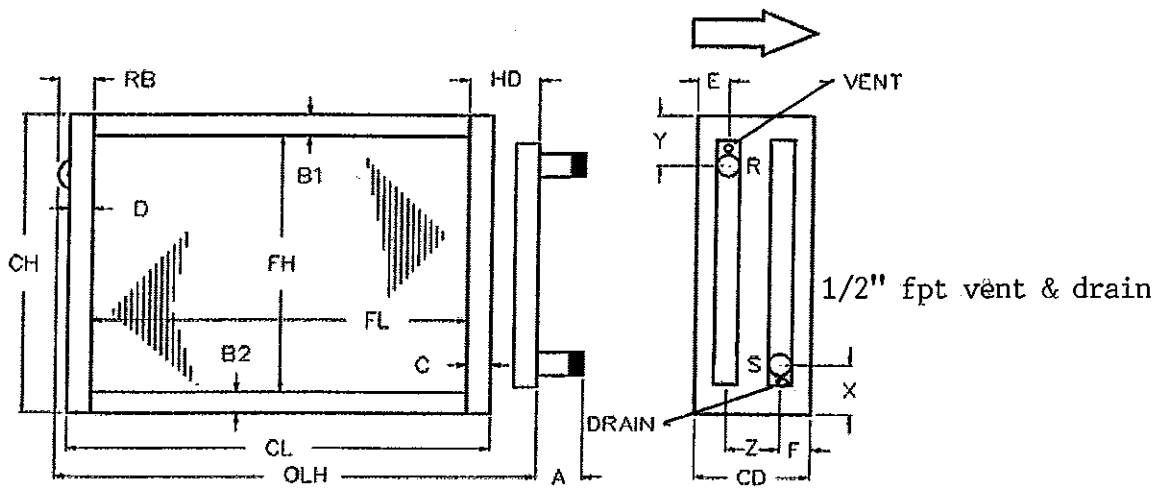

FH	FL	CH	CL	CD	HD	OLH	A	X	F
30.00	78.00	33.00	85.00	10.00	5.13	88.00	8.00	3.00	1.75
Y	E	C	D	B1	B2	RB	Z	Supply	Return
3.00	1.75	3.50	3.50	1.50	1.50	3.50	6.5	2.00	2.00
Drawing									
WTRRHSTD									

Special Notes:

OLH dimension includes Sentry Guard plugs at both ends of coil

PO Box 578 * Devault, PA 19432 * PH:(800)USA-COIL
PH:(610)296-9668 * Fax:(610)296-9763 * Email: sales@usacoil.com * www.usacoil.com

General Information

Project Name	:	UConn Health Center -
Coil Item No.	:	4
Coil Tag	:	Blower 47 Left Hand
Date	:	01/21/2010 11:14:25
Model No	:	CW58FH07803000020L SG

Coil Construction

Coils/Bank	:	4	
Fin Type	:	58 1.50 x 1.3 Waffle	
Fin Height	:	30	inch
Fin'd Length	:	78	inch
Rows Deep	:	6	
Fins/Inch	:	8	
Circuiting	:	Single	
Tube Material	:	Copper	
Tube Thick	:	0.025	inch
Fin Material	:	Aluminum	
Fin Thick	:	0.0060	inch
Allow OppEnd	:	No	

Airside

Airflow	:	28395	SCFM
Altitude	:	0	Feet
Ent. DB/WB	:	84.0 / 67.8	°F
Cap Req'd	:		Btu/Hr
LDB/LWB Req'd	:	/	°F

Fluid Side

Fluid	:	Water	
Ent Fluid Temp	:	45	°F
Lvg FLuid Temp	:	57	°F
Fluid Flow Rate	:		GPM

Coil Performance

Model No.	:	CW58FH07803000020L	
Rows / FPI	:	6 / 8	
Circuiting	:	Single	
Total Cap	:	1,038,153	Btu/Hr
Sens Cap	:	813,676	Btu/Hr
Lvg DB/WB	:	57.8 / 56.3	°F
Face Velocity	:	436.8	SFPM
Standard APD	:	0.46	in. w.c.
Lvg Fluid	:	56.3	°F
Fluid Flow	:	183.8	GPM
Fluid PD	:	4.59	ft H2O
Fluid Velocity	:	2.60	FPS
Conn Size	:	(1) 2.00"	
Dry Weight	:	320	Lbs

Additional Construction Notes

Coil Coating	:	None
Casing Mat'l	:	Galvanized Steel
Casing Type	:	Flanged
Conn. Mat'l	:	Copper
Conn. Type	:	MPT

Special Notes:

Coil Certified and Rated in Accordance with ARI Standard 410.

Fluid Selection Program
Version 3.4.3 TH

General Information

Project Name	:	UCONN Health Center -
Coil Item No.	:	4
Coil Tag	:	Blower 47 Left Hand
Date	:	01/12/2010 13:40:30
Model No	:	CW58FH07803000020 LSG

Coil Construction

Fin Type	:	58 1.50 x 1.3 Waffle	Coil Coating	:	None
Rows	:	6	Casing Mat'l	:	Galvanized Steel
FPI	:	8	Casing Type	:	Flanged
Tube Material	:	Copper	Connections	:	Copper MPT
Tube Thick	:	0.025 inch	Circuiting	:	Single
Fin Material	:	Aluminum			
Fin Thick	:	0.0060 inch			

Coil Dimensions

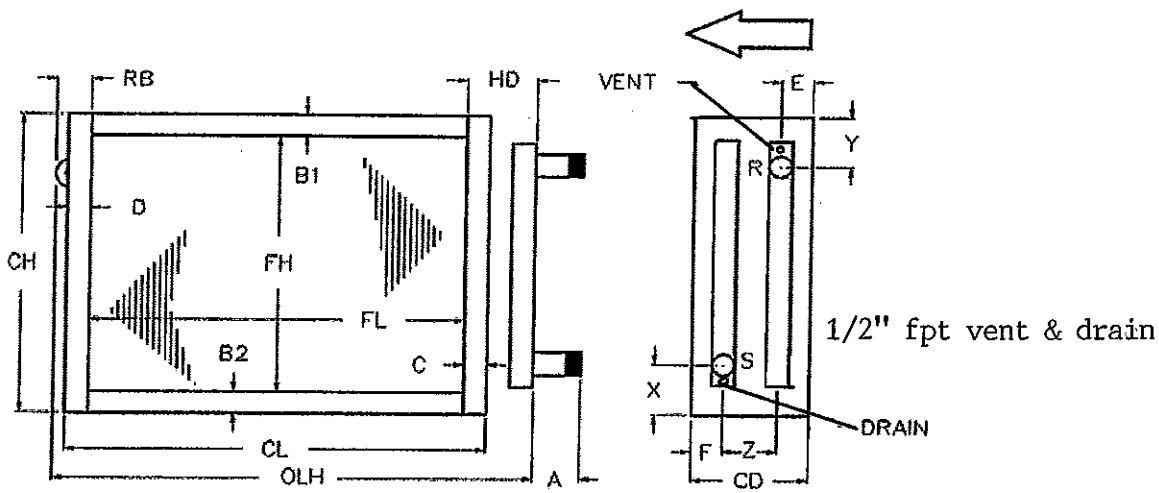

FH	FL	CH	CL	CD	HD	OLH	A	X	F
30.00	78.00	33.00	85.00	10.00	5.13	88.00	8.00	3.00	1.75
Y	E	C	D	B1	B2	RB	Z	Supply	Return
3.00	1.75	3.50	3.50	1.50	1.50	3.50	6.5	2.00	2.00
Drawing									
WTRLHSTD									

Special Notes:

OLH dimension includes Sentry Guard plugs at both ends of coil

PO Box 578 * Devault, PA 19432 * PH:(800)USA-COIL
PH:(610)296-9668 * Fax:(610)296-9763 * Email: sales@usacoil.com * www.usacoil.com

General Information

Project Name	:	UCONN Health Center -
Coil Item No.	:	5
Coil Tag	:	Blower 48 Right Hand
Date	:	01/21/2010 10:16:07
Model No	:	CW58HK08803300022R SG

Coil Construction

Coils/Bank	:	3	
Fin Type	:	58 1.50 x 1.3 Waffle	
Fin Height	:	33	inch
Fin'd Length	:	88	inch
Rows Deep	:	8	
Fins/Inch	:	10	
Circuiting	:	Single	
Tube Material	:	Copper	
Tube Thick	:	0.025	inch
Fin Material	:	Aluminum	
Fin Thick	:	0.0060	inch
Allow OppEnd	:	No	

Airside

Airflow	:	29625	SCFM
Altitude	:	0	Feet
Ent. DB/WB	:	90.0 / 72.0	°F
Cap Req'd	:		Btu/Hr
LDB/LWB Req'd	:	/	°F

Fluid Side

Fluid	:	Water	
Ent Fluid Temp	:	45	°F
Lvg FLuid Temp	:	55	°F
Fluid Flow Rate	:		GPM

Coil Performance

Model No.	:	CW58HK08803300022R	
Rows / FPI	:	8 / 10	
Circuiting	:	Single	
Total Cap	:	1,878,546	Btu/Hr
Sens Cap	:	1,210,099	Btu/Hr
Lvg DB/WB	:	52.6 / 52.3	°F
Face Velocity	:	489.7	SFPM
Standard APD	:	0.95	in. w.c.
Lvg Fluid	:	54.4	°F
Fluid Flow	:	397.3	GPM
Fluid PD	:	31.33	ft H2O
Fluid Velocity	:	6.81	FPS
Conn Size	:	(1) 2.50"	
Dry Weight	:	540	Lbs

Additional Construction Notes

Coil Coating	:	None
Casing Mat'l	:	Galvanized Steel
Casing Type	:	Flanged
Conn. Mat'l	:	Copper
Conn. Type	:	MPT

Special Notes:

Coil Certified and Rated in Accordance with ARI Standard 410.

Fluid Selection Program
Version 3.4.3 TH

General Information

Project Name	:	UCONN Health Center -
Coil Item No.	:	5
Coil Tag	:	Blower 48 Right Hand
Date	:	01/12/2010 13:42:58
Model No	:	CW58HK08803300022RSG

Coil Construction

Fin Type	:	58 1.50 x 1.3 Waffle	Coil Coating	:	None
Rows	:	8	Casing Mat'l	:	Galvanized Steel
FPI	:	10	Casing Type	:	Flanged
Tube Material	:	Copper	Connections	:	Copper MPT
Tube Thick	:	0.025 inch	Circuiting	:	Single
Fin Material	:	Aluminum			
Fin Thick	:	0.0060 inch			

Coil Dimensions

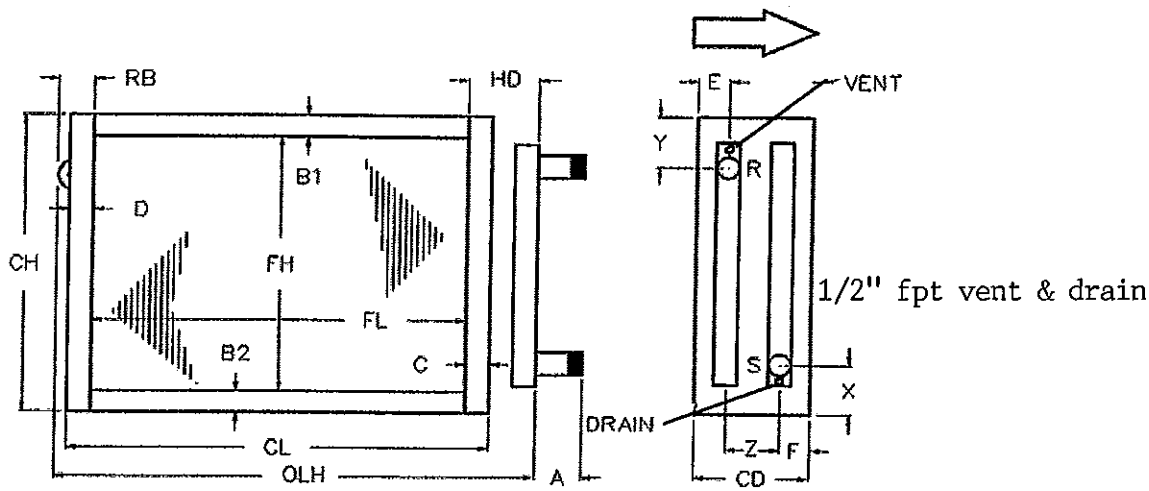

FH	FL	CH	CL	CD	HD	OLH	A	X	F
33.00	88.00	36.00	97.50	12.00	5.63	98.00	8.00	3.00	1.45
Y	E	C	D	B1	B2	RB	Z	Supply	Return
3.00	1.45	6.00	3.50	1.50	1.50	3.50	9.09	2.50	2.50
Drawing									
WTRRHSTD									

Special Notes:

OLH dimension includes Sentry Guard plugs at both ends of coil

PO Box 578 * Devault, PA 19432 * PH:(800)USA-COIL
PH:(610)296-9668 * Fax:(610)296-9763 * Email: sales@usacoil.com * www.usacoil.com

General Information

Project Name	:	UConn Health Center -
Coil Item No.	:	6
Coil Tag	:	Blower 51 Right Hand
Date	:	01/21/2010 11:15:55
Model No	:	CW58FH10203000020RSG

Coil Construction

Coils/Bank	:	4	
Fin Type	:	58 1.50 x 1.3 Waffle	
Fin Height	:	30	inch
Fin'd Length	:	102	inch
Rows Deep	:	6	
Fins/Inch	:	8	
Circuiting	:	Single	
Tube Material	:	Copper	
Tube Thick	:	0.025	inch
Fin Material	:	Aluminum	
Fin Thick	:	0.0060	inch
Allow OppEnd	:	No	

Airside

Airflow	:	45052	SCFM
Altitude	:	0	Feet
Ent. DB/WB	:	84.0 / 67.8	°F
Cap Req'd	:		Btu/Hr
LDB/LWB Req'd	:	/	°F

Fluid Side

Fluid	:	Water	
Ent Fluid Temp	:	45	°F
Lvg FLuid Temp	:	57	°F
Fluid Flow Rate	:		GPM

Coil Performance

Model No.	:	CW58FH10203000020R	
Rows / FPI	:	6 / 8	
Circuiting	:	Single	
Total Cap	:	1,605,721	Btu/Hr
Sens Cap	:	1,263,891	Btu/Hr
Lvg DB/WB	:	58.3 / 56.6	°F
Face Velocity	:	530.0	SFPM
Standard APD	:	0.64	in. w.c.
Lvg Fluid	:	56.2	°F
Fluid Flow	:	284.6	GPM
Fluid PD	:	11.93	ft H2O
Fluid Velocity	:	4.02	FPS
Conn Size	:	(1) 2.00"	
Dry Weight	:	413	Lbs

Additional Construction Notes

Coil Coating	:	None
Casing Mat'l	:	Galvanized Steel
Casing Type	:	Flanged
Conn. Mat'l	:	Copper
Conn. Type	:	MPT

Special Notes:

Coil Certified and Rated in Accordance with ARI Standard 410.

Fluid Selection Program
Version 3.4.3 TH

General Information

Project Name	:	UCONN Health Center -
Coil Item No.	:	6
Coil Tag	:	Blower 51 Right Hand
Date	:	01/12/2010 13:45:30
Model No	:	CW58FH10203000020 R SG

Coil Construction

Fin Type	:	58 1.50 x 1.3 Waffle	Coil Coating	:	None
Rows	:	6	Casing Mat'l	:	Galvanized Steel
FPI	:	8	Casing Type	:	Flanged
Tube Material	:	Copper	Connections	:	Copper MPT
Tube Thick	:	0.025 inch	Circuiting	:	Single
Fin Material	:	Aluminum			
Fin Thick	:	0.0060 inch			

Coil Dimensions

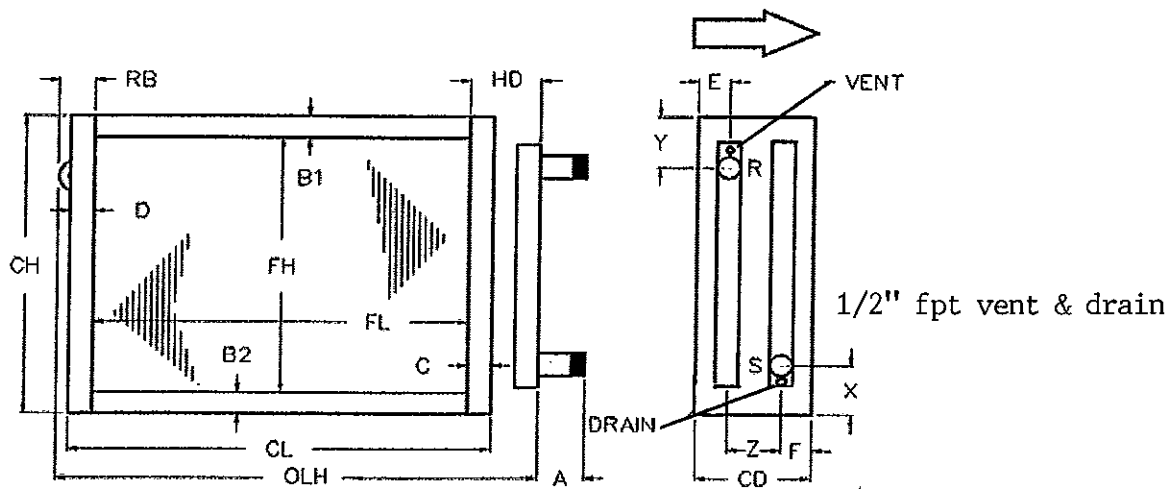

FH	FL	CH	CL	CD	HD	OLH	A	X	F
30.00	102.00	33.00	109.00	10.00	5.13	112.00	8.00	3.00	1.75
Y	E	C	D	B1	B2	RB	Z	Supply	Return
3.00	1.75	3.50	3.50	1.50	1.50	3.50	6.5	2.00	2.00
Drawing									
WTRRHSTD									

Special Notes:

OLH dimension includes Sentry Guard plugs at both ends of coil

PO Box 578 * Devault, PA 19432 * PH:(800)USA-COIL
PH:(610)296-9668 * Fax:(610)296-9763 * Email: sales@usacoil.com * www.usacoil.com

General Information

Project Name	:	UConn Health Center -
Coil Item No.	:	7
Coil Tag	:	Blower 51 Left Hand
Date	:	01/21/2010 11:16:26
Model No	:	CW58FH10203000020L SG

Coil Construction

Coils/Bank	:	4	
Fin Type	:	58 1.50 x 1.3 Waffle	
Fin Height	:	30	inch
Fin'd Length	:	102	inch
Rows Deep	:	6	
Fins/Inch	:	8	
Circuiting	:	Single	
Tube Material	:	Copper	
Tube Thick	:	0.025	inch
Fin Material	:	Aluminum	
Fin Thick	:	0.0060	inch
Allow OppEnd	:	No	

Airside

Airflow	:	45052	SCFM
Altitude	:	0	Feet
Ent. DB/WB	:	84.0 / 67.8	°F
Cap Req'd	:		Btu/Hr
LDB/LWB Req'd	:	/	°F

Fluid Side

Fluid	:	Water	
Ent Fluid Temp	:	45	°F
Lvg FLuid Temp	:	57	°F
Fluid Flow Rate	:		GPM

Coil Performance

Model No.	:	CW58FH10203000020L	
Rows / FPI	:	6 / 8	
Circuiting	:	Single	
Total Cap	:	1,605,721	Btu/Hr
Sens Cap	:	1,263,891	Btu/Hr
Lvg DB/WB	:	58.3 / 56.6	°F
Face Velocity	:	530.0	SFPM
Standard APD	:	0.64	in. w.c.
Lvg Fluid	:	56.2	°F
Fluid Flow	:	284.6	GPM
Fluid PD	:	11.93	ft H2O
Fluid Velocity	:	4.02	FPS
Conn Size	:	(1) 2.00"	
Dry Weight	:	413	Lbs

Additional Construction Notes

Coil Coating	:	None
Casing Mat'l	:	Galvanized Steel
Casing Type	:	Flanged
Conn. Mat'l	:	Copper
Conn. Type	:	MPT

Special Notes:

Coil Certified and Rated in Accordance with ARI Standard 410.

Fluid Selection Program
Version 3.4.3 TH

General Information

Project Name	:	UCONN Health Center -
Coil Item No.	:	7
Coil Tag	:	Blower 51 Left Hand
Date	:	01/12/2010 13:46:08
Model No	:	CW58FH10203000020 L SG

Coil Construction

Fin Type	:	58 1.50 x 1.3 Waffle	Coil Coating	:	None
Rows	:	6	Casing Mat'l	:	Galvanized Steel
FPI	:	8	Casing Type	:	Flanged
Tube Material	:	Copper	Connections	:	Copper MPT
Tube Thick	:	0.025 inch	Circuiting	:	Single
Fin Material	:	Aluminum			
Fin Thick	:	0.0060 inch			

Coil Dimensions

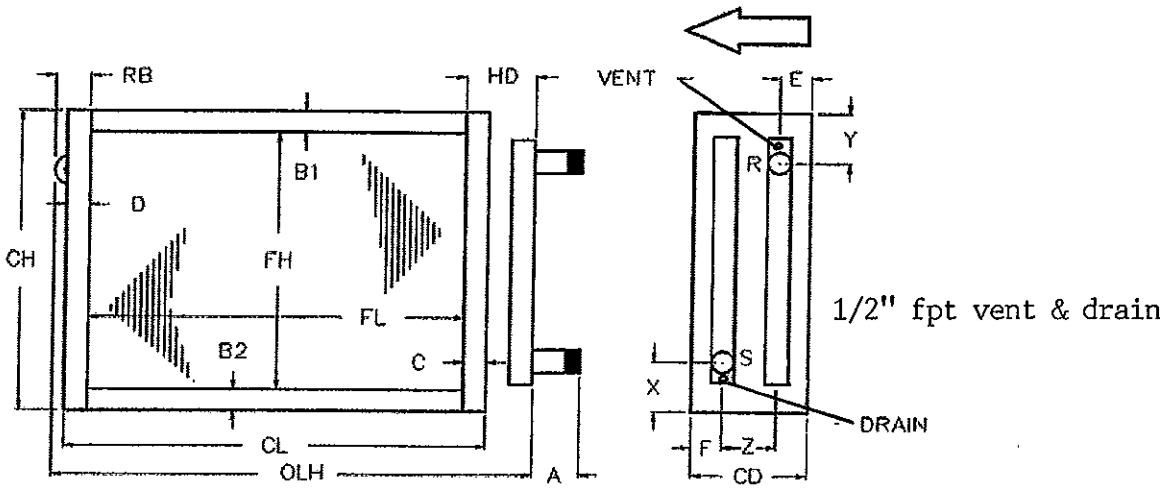

FH	FL	CH	CL	CD	HD	OLH	A	X	F
30.00	102.00	33.00	109.00	10.00	5.13	112.00	8.00	3.00	1.75
Y	E	C	D	B1	B2	RB	Z	Supply	Return
3.00	1.75	3.50	3.50	1.50	1.50	3.50	6.5	2.00	2.00
Drawing									
WTRLHSTD									

Special Notes:

OLH dimension includes Sentry Guard plugs at both ends of coil

PO Box 578 * Devault, PA 19432 * PH:(800)USA-COIL
PH:(610)296-9668 * Fax:(610)296-9763 * Email: sales@usacoil.com * www.usacoil.com

General Information

Project Name	:	UConn Health Center -
Coil Item No.	:	8
Coil Tag	:	Blower 55 Right Hand
Date	:	01/21/2010 11:17:49
Model No	:	CW58FH06353300016R SG

Coil Construction

Coils/Bank	:	3	
Fin Type	:	58 1.50 x 1.3 Waffle	
Fin Height	:	33	inch
Fin'd Length	:	63.5	inch
Rows Deep	:	6	
Fins/Inch	:	8	
Circuiting	:	Three Quarter	
Tube Material	:	Copper	
Tube Thick	:	0.025	inch
Fin Material	:	Aluminum	
Fin Thick	:	0.0060	inch
Allow OppEnd	:	No	

Airside

Airflow	:	23318	SCFM
Altitude	:	0	Feet
Ent. DB/WB	:	84.0 / 68.0	°F
Cap Req'd	:		Btu/Hr
LDB/LWB Req'd	:	/	°F

Fluid Side

Fluid	:	Water	
Ent Fluid Temp	:	45	°F
Lvg FLuid Temp	:	57	°F
Fluid Flow Rate	:		GPM

Coil Performance

Model No.	:	CW58FH06353300016R	
Rows / FPI	:	6 / 8	
Circuiting	:	Three Quarter	
Total Cap	:	821,525	Btu/Hr
Sens Cap	:	644,240	Btu/Hr
Lvg DB/WB	:	58.7 / 57.0	°F
Face Velocity	:	534.1	SFPM
Standard APD	:	0.65	in. w.c.
Lvg Fluid	:	56.2	°F
Fluid Flow	:	146.2	GPM
Fluid PD	:	7.29	ft H2O
Fluid Velocity	:	3.44	FPS
Conn Size	:	(1) 2.00"	
Dry Weight	:	290	Lbs

Additional Construction Notes

Coil Coating	:	None
Casing Mat'l	:	Galvanized Steel
Casing Type	:	Flanged
Conn. Mat'l	:	Copper
Conn. Type	:	MPT

Special Notes:

Coil Rated in Conformance with ARI Standard 410.
Coil not within ARI Certified Directory.

Fluid Selection Program
Version 3.4.3 TH

General Information

Project Name	:	UCONN Health Center -
Coil Item No.	:	8
Coil Tag	:	Blower 55 Right Hand
Date	:	01/15/2010 11:16:58
Model No	:	CW58FH06353300016 R SG

Coil Construction

Fin Type	:	58 1.50 x 1.3 Waffle		Coil Coating	:	None
Rows	:	6		Casing Mat'l	:	Galvanized Steel
FPI	:	8		Casing Type	:	Flanged
Tube Material	:	Copper		Connections	:	Copper MPT
Tube Thick	:	0.025	inch	Circuiting	:	Three Quarter
Fin Material	:	Aluminum				
Fin Thick	:	0.0060	inch			

Coil Dimensions

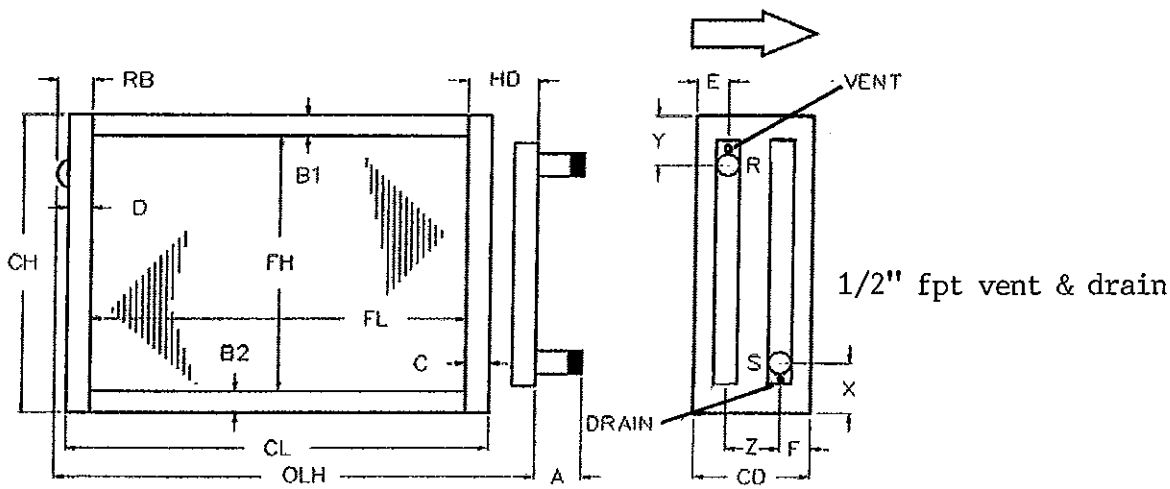

FH	FL	CH	CL	CD	HD	OLH	A	X	F
33.00	63.50	36.00	71.50	10.00	5.13	75.00	8.00	3.00	1.75
Y	E	C	D	B1	B2	RB	Z	Supply	Return
3.00	1.75	4.50	3.50	1.50	1.50	3.50	6.5	2.00	2.00
Drawing									
WTRRHSTD									

Special Notes:

OLH dimension includes Sentry Guard plugs at both ends of coil

PO Box 578 * Devault, PA 19432 * PH:(800)USA-COIL
PH:(610)296-9668 * Fax:(610)296-9763 * Email: sales@usacoil.com * www.usacoil.com

General Information

Project Name	:	UConn Health Center -
Coil Item No.	:	9
Coil Tag	:	Blower 55 Left Hand
Date	:	01/21/2010 11:18:15
Model No	:	CW58FH06353300016L SG

Coil Construction

Coils/Bank	:	3	
Fin Type	:	58 1.50 x 1.3 Waffle	
Fin Height	:	33	inch
Fin'd Length	:	63.5	inch
Rows Deep	:	6	
Fins/Inch	:	8	
Circuiting	:	Three Quarter	
Tube Material	:	Copper	
Tube Thick	:	0.025	inch
Fin Material	:	Aluminum	
Fin Thick	:	0.0060	inch
Allow OppEnd	:	No	

Airside

Airflow	:	23318	SCFM
Altitude	:	0	Feet
Ent. DB/WB	:	84.0 / 68.0	°F
Cap Req'd	:		Btu/Hr
LDB/LWB Req'd	:	/	°F

Fluid Side

Fluid	:	Water	
Ent Fluid Temp	:	45	°F
Lvg FLuid Temp	:	57	°F
Fluid Flow Rate	:		GPM

Coil Performance

Model No.	:	CW58FH06353300016L	
Rows / FPI	:	6 / 8	
Circuiting	:	Three Quarter	
Total Cap	:	821,525	Btu/Hr
Sens Cap	:	644,240	Btu/Hr
Lvg DB/WB	:	58.7 / 57.0	°F
Face Velocity	:	534.1	SFPM
Standard APD	:	0.65	in. w.c.
Lvg Fluid	:	56.2	°F
Fluid Flow	:	146.2	GPM
Fluid PD	:	7.29	ft H2O
Fluid Velocity	:	3.44	FPS
Conn Size	:	(1) 2.00"	
Dry Weight	:	290	Lbs

Additional Construction Notes

Coil Coating	:	None
Casing Mat'l	:	Galvanized Steel
Casing Type	:	Flanged
Conn. Mat'l	:	Copper
Conn. Type	:	MPT

Special Notes:

Coil Rated in Conformance with ARI Standard 410.
Coil not within ARI Certified Directory.

Fluid Selection Program
Version 3.4.3 TH

General Information

Project Name	:	UCONN Health Center -
Coil Item No.	:	9
Coil Tag	:	Blower 55 Left Hand
Date	:	01/15/2010 11:17:33
Model No	:	CW58FH06353300016 L SG

Coil Construction

Fin Type	:	58 1.50 x 1.3 Waffle	Coil Coating	:	None
Rows	:	6	Casing Mat'l	:	Galvanized Steel
FPI	:	8	Casing Type	:	Flanged
Tube Material	:	Copper	Connections	:	Copper MPT
Tube Thick	:	0.025 inch	Circuiting	:	Three Quarter
Fin Material	:	Aluminum			
Fin Thick	:	0.0060 inch			

Coil Dimensions

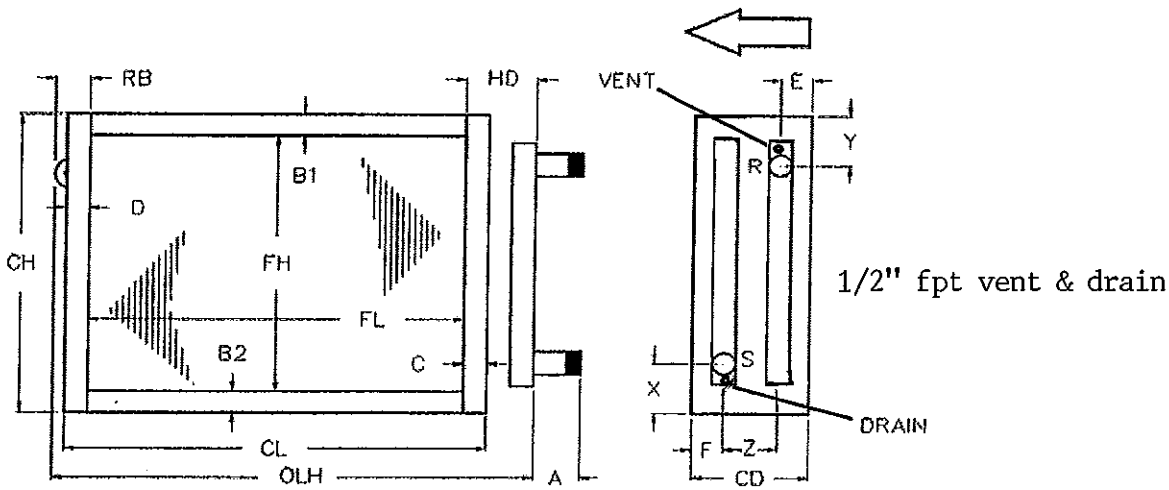

FH	FL	CH	CL	CD	HD	OLH	A	X	F
33.00	63.50	36.00	71.50	10.00	5.13	75.00	8.00	3.00	1.75
Y	E	C	D	B1	B2	RB	Z	Supply	Return
2.75	3.00	4.50	3.50	1.50	1.50	3.50	5.25	2.00	2.00
Drawing									
WTRLHSTD									

Special Notes:

OLH dimension includes Sentry Guard plugs at both ends of coil

PO Box 578 * Devault, PA 19432 * PH:(800)USA-COIL
PH:(610)296-9668 * Fax:(610)296-9763 * Email: sales@usacoil.com * www.usacoil.com

General Information

Project Name	:	UConn Health Center -
Coil Item No.	:	10
Coil Tag	:	Blower 56 Right Hand
Date	:	01/21/2010 11:19:26
Model No	:	CW58FH08802550017R SG

Coil Construction

Coils/Bank	:	4	
Fin Type	:	58 1.50 x 1.3 Waffle	
Fin Height	:	25.5	inch
Fin'd Length	:	88	inch
Rows Deep	:	6	
Fins/Inch	:	8	
Circuiting	:	Single	
Tube Material	:	Copper	
Tube Thick	:	0.025	inch
Fin Material	:	Aluminum	
Fin Thick	:	0.0060	inch
Allow OppEnd	:	No	

Airside

Airflow	:	31708	SCFM
Altitude	:	0	Feet
Ent. DB/WB	:	84.0 / 68.0	°F
Cap Req'd	:		Btu/Hr
LDB/LWB Req'd	:	/	°F

Fluid Side

Fluid	:	Water	
Ent Fluid Temp	:	45	°F
Lvg FLuid Temp	:	57	°F
Fluid Flow Rate	:		GPM

Coil Performance

Model No.	:	CW58FH08802550017R	
Rows / FPI	:	6 / 8	
Circuiting	:	Single	
Total Cap	:	1,135,385	Btu/Hr
Sens Cap	:	885,150	Btu/Hr
Lvg DB/WB	:	58.5 / 56.8	°F
Face Velocity	:	508.7	SFPM
Standard APD	:	0.60	in. w.c.
Lvg Fluid	:	56.2	°F
Fluid Flow	:	201.9	GPM
Fluid PD	:	7.26	ft H2O
Fluid Velocity	:	3.36	FPS
Conn Size	:	(1) 2.00"	
Dry Weight	:	310	Lbs

Additional Construction Notes

Coil Coating	:	None
Casing Mat'l	:	Galvanized Steel
Casing Type	:	Flanged
Conn. Mat'l	:	Copper
Conn. Type	:	MPT

Special Notes:

Coil Certified and Rated in Accordance with ARI Standard 410.

Fluid Selection Program
Version 3.4.3 TH

General Information

Project Name	:	UCONN Health Center -
Coil Item No.	:	10
Coil Tag	:	Blower 56 Right Hand
Date	:	01/12/2010 13:51:06
Model No	:	CW58FH08802550C17R SG

Coil Construction

Fin Type	:	58 1.50 x 1.3 Waffle	Coil Coating	:	None
Rows	:	6	Casing Mat'l	:	Galvanized Steel
FPI	:	8	Casing Type	:	Flanged
Tube Material	:	Copper	Connections	:	Copper MPT
Tube Thick	:	0.025 inch	Circuiting	:	Single
Fin Material	:	Aluminum			
Fin Thick	:	0.0060 inch			

Coil Dimensions

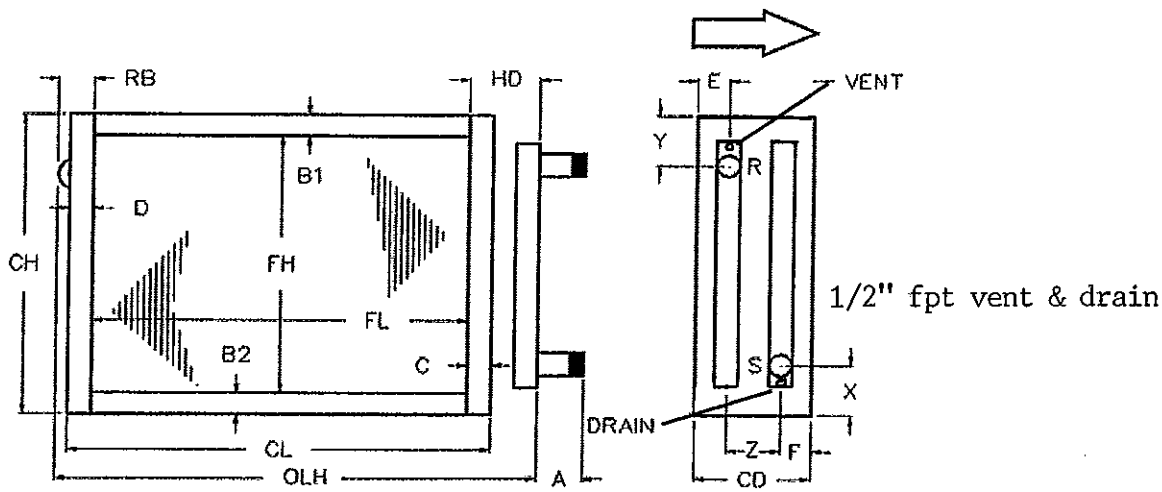

FH	FL	CH	CL	CD	HD	OLH	A	X	F
25.50	88.00	28.50	95.00	10.00	5.13	98.00	8.00	3.00	1.75
Y	E	C	D	B1	B2	RB	Z	Supply	Return
3.00	1.75	3.50	3.50	1.50	1.50	3.50	6.5	2.00	2.00
Drawing									
WTRRHSTD									

Special Notes:

OLH dimension includes Sentry Guard plugs at both ends of coil

PO Box 578 * Devault, PA 19432 * PH:(800)USA-COIL
PH:(610)296-9668 * Fax:(610)296-9763 * Email: sales@usacoil.com * www.usacoil.com

General Information

Project Name	:	UConn Health Center -
Coil Item No.	:	11
Coil Tag	:	Blower 56 Left Hand
Date	:	01/21/2010 11:19:48
Model No	:	CW58FH08802550017L SG

Coil Construction

Coils/Bank	:	4	
Fin Type	:	58 1.50 x 1.3 Waffle	
Fin Height	:	25.5	inch
Fin'd Length	:	88	inch
Rows Deep	:	6	
Fins/Inch	:	8	
Circuiting	:	Single	
Tube Material	:	Copper	
Tube Thick	:	0.025	inch
Fin Material	:	Aluminum	
Fin Thick	:	0.0060	inch
Allow OppEnd	:	No	

Airside

Airflow	:	31708	SCFM
Altitude	:	0	Feet
Ent. DB/WB	:	84.0 / 68.0	°F
Cap Req'd	:		Btu/Hr
LDB/LWB Req'd	:	/	°F

Fluid Side

Fluid	:	Water	
Ent Fluid Temp	:	45	°F
Lvg FLuid Temp	:	57	°F
Fluid Flow Rate	:		GPM

Coil Performance

Model No.	:	CW58FH08802550017L	
Rows / FPI	:	6 / 8	
Circuiting	:	Single	
Total Cap	:	1,135,385	Btu/Hr
Sens Cap	:	885,150	Btu/Hr
Lvg DB/WB	:	58.5 / 56.8	°F
Face Velocity	:	508.7	SFPM
Standard APD	:	0.60	in. w.c.
Lvg Fluid	:	56.2	°F
Fluid Flow	:	201.9	GPM
Fluid PD	:	7.26	ft H2O
Fluid Velocity	:	3.36	FPS
Conn Size	:	(1) 2.00"	
Dry Weight	:	310	Lbs

Additional Construction Notes

Coil Coating	:	None
Casing Mat'l	:	Galvanized Steel
Casing Type	:	Flanged
Conn. Mat'l	:	Copper
Conn. Type	:	MPT

Special Notes:

Coil Certified and Rated in Accordance with ARI Standard 410.

Fluid Selection Program
Version 3.4.3 TH

General Information

Project Name	:	UCONN Health Center -
Coil Item No.	:	11
Coil Tag	:	Blower 56 Left Hand
Date	:	01/12/2010 13:51:43
Model No	:	CW58FH0880255001 7 L SG

Coil Construction

Fin Type	:	58 1.50 x 1.3 Waffle	Coil Coating	:	None
Rows	:	6	Casing Mat'l	:	Galvanized Steel
FPI	:	8	Casing Type	:	Flanged
Tube Material	:	Copper	Connections	:	Copper MPT
Tube Thick	:	0.025 inch	Circuiting	:	Single
Fin Material	:	Aluminum			
Fin Thick	:	0.0060 inch			

Coil Dimensions

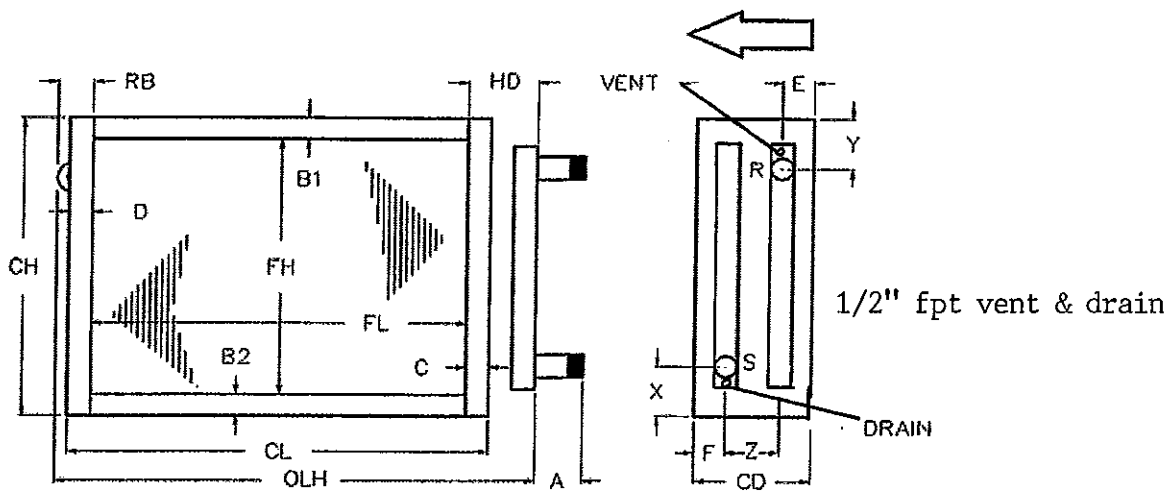

FH	FL	CH	CL	CD	HD	OLH	A	X	F
25.50	88.00	28.50	95.00	10.00	5.13	98.00	8.00	3.00	1.75
Y	E	C	D	B1	B2	RB	Z	Supply	Return
3.00	1.75	3.50	3.50	1.50	1.50	3.50	6.5	2.00	2.00
Drawing									
WTRLHSTD									

Special Notes:

OLH dimension includes Sentry Guard plugs at both ends of coil

PO Box 578 * Devault, PA 19432 * PH:(800)USA-COIL
PH:(610)296-9668 * Fax:(610)296-9763 * Email: sales@usacoil.com * www.usacoil.com

H. CONTRACTORS CERTIFICATION

We certify that we are familiar with the contents of the Contract Documents for this project and that we have examined the site and accept the conditions under which the work will be done.

NOTE: All proposals must be signed by a duly authorized representative of the firm. NO FACSIMILE SIGNATURE PERMITTED.

If this proposal is being submitted by a Joint Venture, each Joint Venture shall sign the Proposal, and each Joint Venture agrees to be bound by the terms and conditions thereof.

Signed the _____ day of _____ 20____.

Project Number: _____

(TO BE FILLED IN AND SIGNED BY THE BIDDER)

Firm Name: _____

Street: _____

City/State/Zip Code: _____

Telephone: _____

Fax Number: _____

Duly Authorized Signature: _____

Name / Title _____

(TO BE FILLED IN AND SIGNED BY JOINT VENTURE IF APPLICABLE)

Firm Name: _____

Street: _____

City/State/Zip Code: _____

Telephone: _____

Fax Number: _____

Duly Authorized Signature: _____

Name / Title _____

Duly Authorized Signature: _____

Name / Title _____

END OF SECTION

FCL-9 Rev.08/09

ADDENDUM TO BID

Jennifer K. Kelley
Senior Purchasing Officer
jkk1011@adp.uchc.edu
Email Address
860-679-1988
Telephone Number

UNIVERSITY OF CONNECTICUT HEALTH CENTER
FACILITY CONTRACTS & LEASES
263 Farmington Avenue, MC4039
Farmington, CT 06032

Bid Number
FCL-02-00111
Bid Due Date:
February 17, 2010

Bid: FCL-02-00111

Addendum Number: 1

Title: Cooling Coil Replacement

For: The University of Connecticut Health Center

Bidders Note:
Please incorporate the attached information into your bid specification package.

All other terms & conditions remain unchanged

End of Addendum

This Addendum must be *Signed & Returned* with your bid.

_____ _____
Authorized Signature of Bidder Company Name

Approved _____
Jennifer K. Kelley
Purchasing Services Officer
(Original signature on file in Facility Contract & Leases)

Dated Issued: February 12, 2010

Project Name:	University of Connecticut Health Center - Chilled Water Coil Replacement Addendum #1
Project Number:	21-09-140
Submission / Date:	February 11, 2010

DIVISION 23 - HEATING VENTILATING AND AIR CONDITIONING

230523 General-Duty Valves for HVAC Piping
230719 HVAC Piping Insulation
232113 Hydronic Piping
238216 Air Coils

SECTION 230523 - GENERAL-DUTY VALVES FOR HVAC PIPING

PART 1 - GENERAL

1.1 RELATED DOCUMENTS

A. Drawings and general provisions of the Contract, including General and Supplementary Conditions and Division 01 Specification Sections, apply to this Section.

1.2 SUMMARY

A. Section Includes:

1. Brass ball valves.
2. Bronze ball valves.
3. Iron, single-flange butterfly valves.
4. Iron, grooved-end butterfly valves.
5. Bronze swing check valves.
6. Iron swing check valves.
7. Iron, grooved-end swing-check valves.
8. Bronze gate valves.
9. Iron gate valves.
10. Bronze globe valves.
11. Chainwheels.

B. Related Sections:

1. Division 23 HVAC piping Sections for specialty valves applicable to those Sections only.
2. Division 23 Section "Identification for HVAC Piping and Equipment" for valve tags and schedules.

1.3 DEFINITIONS

A. CWP: Cold working pressure.

B. EPDM: Ethylene propylene copolymer rubber.

C. NBR: Acrylonitrile-butadiene, Buna-N, or nitrile rubber.

D. NRS: Nonrising stem.

E. OS&Y: Outside screw and yoke.

F. PTFE: Tetrafluoroethylene resin.

G. RPTFE: Reinforced tetrafluoroethylene resin.

H. RS: Rising stem.

I. SWP: Steam working pressure.

J. VITON: Fluoroelasteromer FKM.

1.4 SUBMITTALS

A. Product Data: For each type of valve indicated.

1.5 QUALITY ASSURANCE

A. Source Limitations for Valves: Obtain each type of valve from single source from single manufacturer.

B. ASME Compliance:

1. ASME B16.10 and ASME B16.34 for ferrous valve dimensions and design criteria.
2. ASME B31.1 for power piping valves.
3. ASME B31.9 for building services piping valves.

1.6 DELIVERY, STORAGE, AND HANDLING

A. Prepare valves for shipping as follows:

1. Protect internal parts against rust and corrosion.
2. Protect threads, flange faces, grooves, and weld ends.
3. Set gate and globe valves closed to prevent rattling.
4. Set ball valves open to minimize exposure of functional surfaces.
5. Set butterfly valves closed or slightly open.
6. Block check valves in either closed or open position.

B. Use the following precautions during storage:

1. Maintain valve end protection.
2. Store valves indoors and maintain at higher than ambient dew point temperature. If outdoor storage is necessary, store valves off the ground in watertight enclosures.

C. Use sling to handle large valves; rig sling to avoid damage to exposed parts. Do not use handwheels or stems as lifting or rigging points.

PART 2 - PRODUCTS

2.1 GENERAL REQUIREMENTS FOR VALVES

A. Refer to HVAC valve schedule articles for applications of valves.

B. Control valve on BL-56 will be moving from supply side to return side of coil. Refer to drawings for details. Control of valve is from Carrier control system. Disconnect and reconnect control wiring as required.

~~B.~~C. Valve Pressure and Temperature Ratings: Not less than indicated and as required for system pressures and temperatures.

~~C.~~D. Valve Sizes: Same as upstream piping unless otherwise indicated.

~~D.~~E. Valve Actuator Types:

1. Handwheel: For valves other than quarter-turn types.
2. Handlever: For quarter-turn valves NPS 6 and smaller except plug valves.
3. Chainwheel: Device for attachment to valve handwheel, stem, or other actuator; of size and with chain for mounting height, as indicated in the "Valve Installation" Article.

~~E.~~F. Valves in Insulated Piping: With 2-inch stem extensions and the following features:

1. Gate Valves: With rising stem.
2. Ball Valves: With extended operating handle of non-thermal-conductive material, and protective sleeve that allows operation of valve without breaking the vapor seal or disturbing insulation.
3. Butterfly Valves: With extended neck.

~~F.~~G. Valve-End Connections:

1. Flanged: With flanges according to ASME B16.1 for iron valves.
2. Solder Joint: With sockets according to ASME B16.18.
3. Threaded: With threads according to ASME B1.20.1.

~~G.~~H. Valve Bypass and Drain Connections: MSS SP-45.

2.2 BRONZE BALL VALVES

A. Two-Piece, Full-Port, Bronze Ball Valves with Bronze Trim:

1. Manufacturers: Subject to compliance with requirements, provide products by one of the following:

a. American Valve, Inc.
b. Conbraco Industries, Inc.; Apollo Valves.

c. DynaQuip Controls.
d. Hammond Valve.
e. Kitz Corporation.
f. Legend Valve.
g. Milwaukee Valve Company.
h. Watts Regulator Co.; a division of Watts Water Technologies, Inc.

2. Description:

a. Standard: MSS SP-110.
b. SWP Rating: 150 psig.
c. CWP Rating: 600 psig.
d. Body Design: Two piece.
e. Body Material: Bronze.
f. Ends: Threaded or soldered.
g. Seats: PTFE or RPTFE.
h. Stem: Bronze.
i. Ball: Chrome-plated brass.
j. Port: Full.
k. Packing gland nut or VITON/FPM double o-ring seals.

2.3 IRON GATE VALVES

A. Class 125, NRS, Iron Gate Valves:

1. Manufacturers: Subject to compliance with requirements, provide products by one of the following:

a. Cincinnati Valve Company; Licenser of Lukenhimer Valves.
b. Crane Co.; Crane Valve Group; Crane Valves.
c. Crane Co.; Crane Valve Group; Jenkins Valves.
d. Crane Co.; Crane Valve Group; Stockham Division.
e. Hammond Valve.
f. Kitz Corporation.
g. Legend Valve.
h. Milwaukee Valve Company.
i. NIBCO INC.
j. Powell Valves.
k. Watts Regulator Co.; a division of Watts Water Technologies, Inc.

2. Description:

a. Standard: MSS SP-70, Type I.
b. NPS 2-1/2 to NPS 12, CWP Rating: 200 psig.
c. NPS 14 to NPS 24, CWP Rating: 150 psig.
d. Body Material: ASTM A 126, gray iron with bolted bonnet.
e. Ends: Flanged.
f. Trim: Bronze.

g. Disc: Solid wedge.
h. Packing and Gasket: Asbestos free.

B. Class 125, OS&Y, Iron Gate Valves:

1. Manufacturers: Subject to compliance with requirements, provide products by one of the following:

a. Cincinnati Valve Company; Licenser of Lukenhimer Valves.
b. Crane Co.; Crane Valve Group; Crane Valves.
c. Crane Co.; Crane Valve Group; Jenkins Valves.
d. Crane Co.; Crane Valve Group; Stockham Division.
e. Hammond Valve.
f. Kitz Corporation.
g. Legend Valve.
h. Milwaukee Valve Company.
i. NIBCO INC.
j. Powell Valves.
k. Watts Regulator Co.; a division of Watts Water Technologies, Inc.

2. Description:

a. Standard: MSS SP-70, Type I.
b. NPS 2-1/2 to NPS 12, CWP Rating: 200 psig.
c. NPS 14 to NPS 24, CWP Rating: 150 psig.
d. Body Material: ASTM A 126, gray iron with bolted bonnet.
e. Ends: Flanged.
f. Trim: Bronze.
g. Disc: Solid wedge.
h. Packing and Gasket: Asbestos free.

2.4 BRONZE GLOBE VALVES

A. Class 125, Bronze Globe Valves with Bronze Disc:

1. Manufacturers: Subject to compliance with requirements, provide products by one of the following:

a. Cincinnati Valve Company; Licenser of Lukenhimer Valves.
b. Crane Co.; Crane Valve Group; Crane Valves.
c. Crane Co.; Crane Valve Group; Stockham Division.
d. Hammond Valve.
e. Kitz Corporation.
f. Milwaukee Valve Company.
g. NIBCO INC.
h. Powell Valves.
i. Red-White Valve Corporation.
j. Watts Regulator Co.; a division of Watts Water Technologies, Inc.

2. Description:

   a. Standard: MSS SP-80, Type 1.
   b. CWP Rating: 200 psig.
   c. Body Material: ASTM B 62, bronze with integral seat and screw-in bonnet.
   d. Ends: Threaded.
   e. Stem and Disc: Bronze.
   f. Packing: Asbestos free.
   g. Handwheel: Malleable iron, bronze.

2.5 IRON GLOBE VALVES

A. Class 125, Iron Globe Valves:

1. Manufacturers: Subject to compliance with requirements, provide products by one of the following:

   a. Cincinnati Valve Company; Licenser of Lukenhimer Valves.
   b. Crane Co.; Crane Valve Group; Crane Valves.
   c. Crane Co.; Crane Valve Group; Jenkins Valves.
   d. Crane Co.; Crane Valve Group; Stockham Division.
   e. Hammond Valve.
   f. Kitz Corporation.
   g. Milwaukee Valve Company.
   h. NIBCO INC.
   i. Powell Valves.

2. Description:

   a. Standard: MSS SP-85, Type I.
   b. CWP Rating: 200 psig.
   c. Body Material: ASTM A 126, gray iron with bolted bonnet.
   d. Ends: Flanged.
   e. Trim: Bronze.
   f. Packing and Gasket: Asbestos free.

2.6 CHAINWHEELS

A. Manufacturers: Subject to compliance with requirements, provide products by one of the following:

   1. Babbitt Steam Specialty Co.
   2. Roto Hammer Industries.
   3. Trumbull Industries.

B. Description: Valve actuation assembly with sprocket rim, brackets, and chain.

1. Brackets: Type, number, size, and fasteners required to mount actuator on valve.
2. Attachment: For connection to butterfly valve stems.
3. Sprocket Rim with Chain Guides: Ductile or cast iron, of type and size required for valve.
4. Chain: Hot-dip, galvanized steel, of size required to fit sprocket rim.

PART 3 - EXECUTION

3.1 EXAMINATION

A. Examine valve interior for cleanliness, freedom from foreign matter, and corrosion. Remove special packing materials, such as blocks, used to prevent disc movement during shipping and handling.

B. Operate valves in positions from fully open to fully closed. Examine guides and seats made accessible by such operations.

C. Examine threads on valve and mating pipe for form and cleanliness.

D. Examine mating flange faces for conditions that might cause leakage. Check bolting for proper size, length, and material. Verify that gasket is of proper size, that its material composition is suitable for service, and that it is free from defects and damage.

E. Do not attempt to repair defective valves; replace with new valves.

3.2 VALVE INSTALLATION

A. Install valves with unions or flanges at each piece of equipment arranged to allow service, maintenance, and equipment removal without system shutdown.

B. Some existing isolation valves on main supply and return lines are leaking. These valves shall not be repaired or replaced as part of this Contract

~~B.~~C. Locate valves for easy access and provide separate support where necessary.

~~C.~~D. Install valves in horizontal piping with stem at or above center of pipe.

~~D.~~E. Install valves in position to allow full stem movement.

~~E.~~F. Install chainwheels on operators for butterfly, gate and globe valves NPS 4 and larger and more than 96 inches above floor. Extend chains to 60 inches above finished floor.

~~F.~~G. Install check valves for proper direction of flow and as follows:

1. Swing Check Valves: In horizontal position or vertical with vertical flow with hinge pin level.

3.3 ADJUSTING

A. Adjust or replace valve packing after piping systems have been tested and put into service but before final adjusting and balancing. Replace valves if persistent leaking occurs.

3.4 GENERAL REQUIREMENTS FOR VALVE APPLICATIONS

A. If valve applications are not indicated, use the following:

1. Shutoff Service: Ball, or gate valves.

B. If valves with specified SWP classes or CWP ratings are not available, the same types of valves with higher SWP classes or CWP ratings may be substituted.

C. Select valves, with the following end connections:

1. For Steel Piping, NPS 2 and Smaller: Threaded ends.
2. For Steel Piping, NPS 2-1/2 to NPS 4: Flanged ends.
3. For Steel Piping, NPS 5 and Larger: Flanged ends.

3.5 CHILLED-WATER VALVE SCHEDULE

A. Pipe NPS 2 and Smaller:

1. Bronze Valves: May be provided with solder-joint ends instead of threaded ends.
2. Ball Valves: Two piece, full port, bronze with brass trim.
3. Bronze Globe Valves: Class 125, bronze disc.

B. Pipe NPS 2-1/2 and Larger:

1. Iron, Single-Flange, Two-Piece Stem Butterfly Valves, NPS 2-1/2 to NPS 12: 200 CWP, EPDM seat, aluminum-bronze or nickel-plated disc.
2. Iron Gate Valves: Class 125 OS&Y.
3. Iron Globe Valves: Class 125.

END OF SECTION 230523

~~02/04/10~~
02/11/10

SECTION 230719 - HVAC PIPING INSULATION

PART 1 - GENERAL

1.1 RELATED DOCUMENTS

A. Drawings and general provisions of the Contract, including General and Supplementary Conditions and Division 01 Specification Sections, apply to this Section.

1.2 DEFINITIONS

A. Conditioned Space: An area, room, ceiling space/plenum or space within the building structure being heated or cooled (by direct expansion or chilled water) or both, by equipment or appliance and is not subject to outdoor ambient conditions.

B. Unconditioned Space: An area, room or space within the building structure not being conditioned and subject to outdoor ambient conditions. Select examples: above ceiling spaces in ducted return systems, mechanical and electrical rooms, crawl spaces, tunnels, plenums or rooms connecting to the outside.

C. Concealed Ducts/Pipes: Ducts/Pipes not visible within the room they are located, after the project is completed.

D. Exposed Ducts/Pipes: Ducts/Pipes visible within the room they are located, after the project is completed.

E. Ceiling Space / Plenum: An enclosed portion of the building structure, other than an occupiable space being conditioned, that is designed to allow air movement, and thereby serve as part of an air distribution system.

1.3 SUMMARY

A. Section includes insulating the following HVAC piping systems:

1. Chilled-water piping, indoors.

B. Related Sections:

1. Division 23 Section "HVAC Equipment Insulation."
2. Division 23 Section "Duct Insulation."

1.4 SUBMITTALS

A. Product Data: For each type of product indicated. Include thermal conductivity, water-vapor permeance thickness, and jackets (both factory and field applied if any).

B. Shop Drawings: Include plans, elevations, sections, details, and attachments to other work.

1. Detail application of protective shields, saddles, and inserts at hangers for each type of insulation and hanger.
2. Detail insulation application at elbows, fittings, flanges, valves, and specialties for each type of insulation.
3. Detail removable insulation at piping specialties.
4. Detail application of field-applied jackets.
5. Detail application at linkages of control devices.

C. Qualification Data: For qualified Installer.

D. Material Test Reports: From a qualified testing agency acceptable to authorities having jurisdiction indicating, interpreting, and certifying test results for compliance of insulation materials, sealers, attachments, cements, and jackets, with requirements indicated. Include dates of tests and test methods employed.

1.5 QUALITY ASSURANCE

A. Installer Qualifications: Skilled mechanics who have successfully completed an apprenticeship program or another craft training program certified by the Department of Labor, Bureau of Apprenticeship and Training.

B. Surface-Burning Characteristics: For insulation and related materials, as determined by testing identical products according to ASTM E 84, by a testing and inspecting agency acceptable to authorities having jurisdiction. Factory label insulation and jacket materials and adhesive, mastic, tapes, and cement material containers, with appropriate markings of applicable testing agency.

1. Insulation Installed Indoors: Flame-spread index of 25 or less, and smoke-developed index of 50 or less.

1.6 DELIVERY, STORAGE, AND HANDLING

A. Packaging: Insulation material containers shall be marked by manufacturer with appropriate ASTM standard designation, type and grade, and maximum use temperature.

1.7 COORDINATION

A. Coordinate sizes and locations of supports, hangers, and insulation shields specified in Division 23 Section "Hangers and Supports for HVAC Piping and Equipment."

B. Coordinate clearance requirements with piping Installer for piping insulation application. Before preparing piping Shop Drawings, establish and maintain clearance requirements for installation of insulation and field-applied jackets and finishes and for space required for maintenance.

1.8 SCHEDULING

A. Schedule insulation application after pressure testing systems and, where required, after installing and testing heat tracing. Insulation application may begin on segments that have satisfactory test results.

B. Complete installation and concealment of plastic materials as rapidly as possible in each area of construction.

PART 2 - PRODUCTS

2.1 INSULATION MATERIALS

A. Comply with requirements in "Piping Insulation Schedule, General," "Indoor Piping Insulation Schedule," articles for where insulating materials shall be applied.

B. Products shall not contain asbestos, lead, mercury, or mercury compounds.

C. Products that come in contact with stainless steel shall have a leachable chloride content of less than 50 ppm when tested according to ASTM C 871.

D. Insulation materials for use on austenitic stainless steel shall be qualified as acceptable according to ASTM C 795.

E. Mineral-Fiber, Preformed Pipe Insulation:

1. Products: Subject to compliance with requirements, provide one of the following:

a. Certainteed Corp.
b. Johns Manville; Micro-Lok.
c. Knauf Insulation; 1000-Degree Pipe Insulation.
d. Owens Corning; Fiberglas Pipe Insulation or SSL II.

2. Type I, 850 deg F Materials: Mineral or glass fibers bonded with a thermosetting resin. Comply with ASTM C 547, Type I, Grade A, with factory-applied ASJ-SSL. Factory-applied jacket requirements are specified in "Factory-Applied Jackets" Article.

F. Mineral-Fiber, Pipe and Casing: Mineral or glass fibers bonded with a thermosetting resin. Semirigid board material with factory-applied ASJ complying with ASTM C 612, Type IB. Nominal density is 2.5 lb/cu. ft. or more. Thermal conductivity (k-value) at 100 deg F is 0.29

Btu x in./h x sq. ft. x deg F or less. Factory-applied jacket requirements are specified in "Factory-Applied Jackets" Article.

1. Products: Subject to compliance with requirements, provide one of the following:

   a. CertainTeed Corp.; CrimpWrap.
   b. Johns Manville; MicroFlex.
   c. Knauf Insulation; Pipe and Tank Insulation.
   d. Owens Corning; Fiberglas Pipe and Tank Insulation.

2.2 ADHESIVES

A. Materials shall be compatible with insulation materials, jackets, and substrates and for bonding insulation to itself and to surfaces to be insulated unless otherwise indicated.

B. Mineral-Fiber Adhesive: Comply with MIL-A-3316C, Class 2, Grade A.

1. Products: Subject to compliance with requirements, provide one of the following:

   a. Childers Brand, Specialty Construction Brands, Inc., a business of H. B. Fuller Company; CP-127.
   b. Eagle Bridges - Marathon Industries; 225.
   c. Foster Brand, Specialty Construction Brands, Inc., a business of H. B. Fuller Company; 85-60/85-70.
   d. Mon-Eco Industries, Inc.; 22-25.

2. For indoor applications, use adhesive that has a VOC content of 80 g/L or less when calculated according to 40 CFR 59, Subpart D (EPA Method 24).
3. Use adhesive that complies with the testing and product requirements of the California Department of Health Services' "Standard Practice for the Testing of Volatile Organic Emissions from Various Sources Using Small-Scale Environmental Chambers," including 2004 Addenda.

C. ASJ Adhesive, and FSK and PVDC Jacket Adhesive: Comply with MIL-A-3316C, Class 2, Grade A for bonding insulation jacket lap seams and joints.

1. Products: Subject to compliance with requirements, provide one of the following:

   a. Childers Brand, Specialty Construction Brands, Inc., a business of H. B. Fuller Company; CP-82.
   b. Eagle Bridges - Marathon Industries; 225.
   c. Foster Brand, Specialty Construction Brands, Inc., a business of H. B. Fuller Company; 85-50.
   d. Mon-Eco Industries, Inc.; 22-25.

2. For indoor applications, use adhesive that has a VOC content of 50 g/L or less when calculated according to 40 CFR 59, Subpart D (EPA Method 24).

3. Use adhesive that complies with the testing and product requirements of the California Department of Health Services' "Standard Practice for the Testing of Volatile Organic Emissions from Various Sources Using Small-Scale Environmental Chambers," including 2004 Addenda.

D. PVC Jacket Adhesive: Compatible with PVC jacket.

1. Products: Subject to compliance with requirements, provide one of the following:

a. Dow Corning Corporation; 739, Dow Silicone.
b. Johns Manville; Zeston Perma-Weld, CEEL-TITE Solvent Welding Adhesive.
c. P.I.C. Plastics, Inc.; Welding Adhesive.
d. Speedline Corporation; Polyco VP Adhesive.

2. For indoor applications, use adhesive that has a VOC content of 50 g/L or less when calculated according to 40 CFR 59, Subpart D (EPA Method 24).
3. Use adhesive that complies with the testing and product requirements of the California Department of Health Services' "Standard Practice for the Testing of Volatile Organic Emissions from Various Sources Using Small-Scale Environmental Chambers," including 2004 Addenda.

2.3 MASTICS

A. Materials shall be compatible with insulation materials, jackets, and substrates; comply with MIL-PRF-19565C, Type II.

1. For indoor applications, use mastics that have a VOC content of 50 g/L or less when calculated according to 40 CFR 59, Subpart D (EPA Method 24).

B. Vapor-Barrier Mastic: Water based; suitable for indoor use on below-ambient services.

1. Products: Subject to compliance with requirements, provide one of the following:

a. Foster Brand, Specialty Construction Brands, Inc., a business of H. B. Fuller Company; 30-80/30-90.
b. Vimasco Corporation; 749.

2. Water-Vapor Permeance: ASTM E 96/E 96M, Procedure B, 0.013 perm at 43-mil dry film thickness.
3. Service Temperature Range: Minus 20 to plus 180 deg F.
4. Solids Content: ASTM D 1644, 58 percent by volume and 70 percent by weight.
5. Color: White.

2.4 SEALANTS

A. ASJ Flashing Sealants and PVC Jacket Flashing Sealants:

1. Products: Subject to compliance with requirements, provide one of the following:

   a. Childers Brand, Specialty Construction Brands, Inc., a business of H. B. Fuller Company; CP-76.

2. Materials shall be compatible with insulation materials, jackets, and substrates.
3. Fire- and water-resistant, flexible, elastomeric sealant.
4. Service Temperature Range: Minus 40 to plus 250 deg F.
5. Color: White.
6. For indoor applications, use sealants that have a VOC content of 420 g/L or less when calculated according to 40 CFR 59, Subpart D (EPA Method 24).
7. Use sealants that comply with the testing and product requirements of the California Department of Health Services' "Standard Practice for the Testing of Volatile Organic Emissions from Various Sources Using Small-Scale Environmental Chambers," including 2004 Addenda.

2.5 FIELD-APPLIED JACKETS

A. Field-applied jackets shall comply with ASTM C 921, Type I, unless otherwise indicated.

B. PVC Jacket: High-impact-resistant, UV-resistant PVC complying with ASTM D 1784, Class 16354-C; thickness as scheduled; 25/50 flame-spread/smoke developed rating; roll stock ready for shop or field cutting and forming. Thickness is indicated in field-applied jacket schedules.

   1. Products: Subject to compliance with requirements, provide one of the following:

      a. Johns Manville; Zeston.
      b. P.I.C. Plastics, Inc.; FG Series.
      c. Proto Corporation; LoSmoke.
      d. Speedline Corporation; SmokeSafe.

   2. Adhesive: As recommended by jacket material manufacturer.
   3. Color: White.
   4. Factory-fabricated fitting covers to match jacket if available; otherwise, field fabricate.

      a. Shapes: 45- and 90-degree, short- and long-radius elbows, tees, valves, flanges, unions, reducers, end caps, traps and mechanical joints.

2.6 TAPES

A. ASJ Tape: White vapor-retarder tape matching factory-applied jacket with acrylic adhesive, complying with ASTM C 1136.

   1. Products: Subject to compliance with requirements, provide one of the following:

      a. ABI, Ideal Tape Division; 428 AWF ASJ.

b. Avery Dennison Corporation, Specialty Tapes Division; Fasson 0836.
c. Compac Corporation; 104 and 105.
d. Venture Tape; 1540 CW Plus, 1542 CW Plus, and 1542 CW Plus/SQ.

2. Width: 3 inches.
3. Thickness: 11.5 mils.
4. Adhesion: 90 ounces force/inch in width.
5. Elongation: 2 percent.
6. Tensile Strength: 40 lbf/inch in width.
7. ASJ Tape Disks and Squares: Precut disks or squares of ASJ tape.

B. PVC Tape: White vapor-retarder tape matching field-applied PVC jacket with acrylic adhesive; suitable for indoor and outdoor applications.

1. Products: Subject to compliance with requirements, provide one of the following:

a. ABI, Ideal Tape Division; 370 White PVC tape.
b. Compac Corporation; 130.
c. Venture Tape; 1506 CW NS.

2. Width: 2 inches.
3. Thickness: 6 mils.
4. Adhesion: 64 ounces force/inch in width.
5. Elongation: 500 percent.
6. Tensile Strength: 18 lbf/inch in width.

2.7 SECUREMENTS

A. Bands:

1. Products: Subject to compliance with requirements, provide one of the following:

a. ITW Insulation Systems; Gerrard Strapping and Seals.
b. RPR Products, Inc.; Insul-Mate Strapping, Seals, and Springs.

2. Stainless Steel: ASTM A 167 or ASTM A 240/A 240M, Type 304; 0.015 inch thick, 3/4 inch wide with wing seal or closed seal.
3. Aluminum: ASTM B 209, Alloy 3003, 3005, 3105, or 5005; Temper H-14, 0.020 inch thick, 3/4 inch wide with wing seal or closed seal.
4. Springs: Twin spring set constructed of stainless steel with ends flat and slotted to accept metal bands. Spring size determined by manufacturer for application.

B. Staples: Outward-clinching insulation staples, nominal 3/4-inch- wide, stainless steel or Monel.

PART 3 - EXECUTION

3.1 EXAMINATION

A. Examine substrates and conditions for compliance with requirements for installation tolerances and other conditions affecting performance of insulation application.

1. Verify that systems to be insulated have been tested and are free of defects.
2. Verify that surfaces to be insulated are clean and dry.
3. Coordinate with Owner for Asbestos testing and abatement. Abatement of asbestos material shall be at Owner's expense. Asbestos may be located on piping insulation and/or piping gaskets.
~~3.~~4. Proceed with installation only after unsatisfactory conditions have been corrected.

3.2 PREPARATION

A. Surface Preparation: Clean and dry surfaces to receive insulation. Remove materials that will adversely affect insulation application.

3.3 GENERAL INSTALLATION REQUIREMENTS

A. Install insulation materials, accessories, and finishes with smooth, straight, and even surfaces; free of voids throughout the length of piping including fittings, valves, and specialties.

B. Install insulation materials, forms, vapor barriers or retarders, jackets, and thicknesses required for each item of pipe system as specified in insulation system schedules.

C. Install accessories compatible with insulation materials and suitable for the service. Install accessories that do not corrode, soften, or otherwise attack insulation or jacket in either wet or dry state.

D. Install insulation with longitudinal seams at top and bottom of horizontal runs.

E. Install multiple layers of insulation with longitudinal and end seams staggered.

F. Do not weld brackets, clips, or other attachment devices to piping, fittings, and specialties.

G. Keep insulation materials dry during application and finishing.

H. Install insulation with tight longitudinal seams and end joints. Bond seams and joints with adhesive recommended by insulation material manufacturer.

I. Install insulation with least number of joints practical.

J. Where vapor barrier is indicated, seal joints, seams, and penetrations in insulation at hangers, supports, anchors, and other projections with vapor-barrier mastic.

1. Install insulation continuously through hangers and around anchor attachments.
2. For insulation application where vapor barriers are indicated, extend insulation on anchor legs from point of attachment to supported item to point of attachment to structure. Taper and seal ends at attachment to structure with vapor-barrier mastic.
3. Install insert materials and install insulation to tightly join the insert. Seal insulation to insulation inserts with adhesive or sealing compound recommended by insulation material manufacturer.
4. Cover inserts with jacket material matching adjacent pipe insulation. Install shields over jacket, arranged to protect jacket from tear or puncture by hanger, support, and shield.

K. Apply adhesives, mastics, and sealants at manufacturer's recommended coverage rate and wet and dry film thicknesses.

L. Install insulation with factory-applied jackets as follows:

1. Draw jacket tight and smooth.
2. Cover circumferential joints with 3-inch- wide strips, of same material as insulation jacket. Secure strips with adhesive and outward clinching staples along both edges of strip, spaced 4 inches o.c.
3. Overlap jacket longitudinal seams at least 1-1/2 inches. Install insulation with longitudinal seams at bottom of pipe. Clean and dry surface to receive self-sealing lap. Staple laps with outward clinching staples along edge at 4 inches o.c.

   a. For below-ambient services, apply vapor-barrier mastic over staples.

4. Cover joints and seams with tape, according to insulation material manufacturer's written instructions, to maintain vapor seal.
5. Where vapor barriers are indicated, apply vapor-barrier mastic on seams and joints and at ends adjacent to pipe flanges and fittings.

M. Cut insulation in a manner to avoid compressing insulation more than 75 percent of its nominal thickness.

N. Finish installation with systems at operating conditions. Repair joint separations and cracking due to thermal movement.

O. Repair damaged insulation facings by applying same facing material over damaged areas. Extend patches at least 4 inches beyond damaged areas. Adhere, staple, and seal patches similar to butt joints.

P. For above-ambient services, do not install insulation to the following:

1. Vibration-control devices.
2. Testing agency labels and stamps.
3. Nameplates and data plates.
4. Manholes.
5. Handholes.
6. Cleanouts.

3.4 GENERAL PIPE INSULATION INSTALLATION

~~A.~~ Requirements in this article generally apply to all insulation materials except where more specific requirements are specified in various pipe insulation material installation articles.

A.

B. Insulate existing valves that are not presently insulated. Owner shall identify which existing valves are to be insulated.

~~B.~~C. Insulation Installation on Fittings, Valves, Strainers, Flanges, and Unions:

1. Install insulation over fittings, valves, strainers, flanges, unions, and other specialties with continuous thermal and vapor-retarder integrity unless otherwise indicated.
2. Insulate pipe elbows using preformed fitting insulation or mitered fittings made from same material and density as adjacent pipe insulation. Each piece shall be butted tightly against adjoining piece and bonded with adhesive. Fill joints, seams, voids, and irregular surfaces with insulating cement finished to a smooth, hard, and uniform contour that is uniform with adjoining pipe insulation.
3. Insulate tee fittings with preformed fitting insulation or sectional pipe insulation of same material and thickness as used for adjacent pipe. Cut sectional pipe insulation to fit. Butt each section closely to the next and hold in place with tie wire. Bond pieces with adhesive.
4. Insulate valves using preformed fitting insulation or sectional pipe insulation of same material, density, and thickness as used for adjacent pipe. Overlap adjoining pipe insulation by not less than two times the thickness of pipe insulation, or one pipe diameter, whichever is thicker. For valves, insulate up to and including the bonnets, valve stuffing-box studs, bolts, and nuts. Fill joints, seams, and irregular surfaces with insulating cement.
5. Insulate strainers using preformed fitting insulation or sectional pipe insulation of same material, density, and thickness as used for adjacent pipe. Overlap adjoining pipe insulation by not less than two times the thickness of pipe insulation, or one pipe diameter, whichever is thicker. Fill joints, seams, and irregular surfaces with insulating cement. Insulate strainers so strainer basket flange or plug can be easily removed and replaced without damaging the insulation and jacket. Provide a removable reusable insulation cover. For below-ambient services, provide a design that maintains vapor barrier.
6. Insulate flanges and unions using a section of oversized preformed pipe insulation. Overlap adjoining pipe insulation by not less than two times the thickness of pipe insulation, or one pipe diameter, whichever is thicker.
7. Cover segmented insulated surfaces with a layer of finishing cement and coat with a mastic. Install vapor-barrier mastic for below-ambient services and a breather mastic for above-ambient services. Reinforce the mastic with fabric-reinforcing mesh. Trowel the mastic to a smooth and well-shaped contour.
8. For services not specified to receive a field-applied jacket except for flexible elastomeric and polyolefin, install fitted PVC cover over elbows, tees, strainers, valves, flanges, and unions. Terminate ends with PVC end caps. Tape PVC covers to adjoining insulation facing using PVC tape.

9. Install PVC jackets over sections of piping that are or may be in contact during operation with valve chainwheel chains.
10. Stencil or label the outside insulation jacket of each union with the word "union." Match size and color of pipe labels.

~~C.~~D. Insulate instrument connections for thermometers, pressure gages, pressure temperature taps, test connections, flow meters, sensors, switches, and transmitters on insulated pipes. Shape insulation at these connections by tapering it to and around the connection with insulating cement and finish with finishing cement, mastic, and flashing sealant.

~~D.~~E. Install removable insulation covers at locations indicated. Installation shall conform to the following:

1. Make removable flange and union insulation from sectional pipe insulation of same thickness as that on adjoining pipe. Install same insulation jacket as adjoining pipe insulation.
2. When flange and union covers are made from sectional pipe insulation, extend insulation from flanges or union long at least two times the insulation thickness over adjacent pipe insulation on each side of flange or union. Secure flange cover in place with stainless-steel or aluminum bands. Select band material compatible with insulation and jacket.
3. Construct removable valve insulation covers in same manner as for flanges, except divide the two-part section on the vertical center line of valve body.
4. When covers are made from block insulation, make two halves, each consisting of mitered blocks wired to stainless-steel fabric. Secure this wire frame, with its attached insulation, to flanges with tie wire. Extend insulation at least 2 inches over adjacent pipe insulation on each side of valve. Fill space between flange or union cover and pipe insulation with insulating cement. Finish cover assembly with insulating cement applied in two coats. After first coat is dry, apply and trowel second coat to a smooth finish.
5. Unless a PVC jacket is indicated in field-applied jacket schedules, finish exposed surfaces with a metal jacket.

3.5 INSTALLATION OF MINERAL-FIBER INSULATION

A. Insulation Installation on Straight Pipes and Tubes:

1. Secure each layer of preformed pipe insulation to pipe with wire or bands and tighten bands without deforming insulation materials.
2. Where vapor barriers are indicated, seal longitudinal seams, end joints, and protrusions with vapor-barrier mastic and joint sealant.
3. For insulation with factory-applied jackets on above-ambient surfaces, secure laps with outward-clinched staples at 6 inches o.c.
4. For insulation with factory-applied jackets on below-ambient surfaces, do not staple longitudinal tabs. Instead, secure tabs with additional adhesive as recommended by insulation material manufacturer and seal with vapor-barrier mastic and flashing sealant.

B. Insulation Installation on Pipe Flanges:

1. Install preformed pipe insulation to outer diameter of pipe flange.

2. Make width of insulation section same as overall width of flange and bolts, plus twice the thickness of pipe insulation.
3. Fill voids between inner circumference of flange insulation and outer circumference of adjacent straight pipe segments with mineral-fiber blanket insulation.
4. Install jacket material with manufacturer's recommended adhesive, overlap seams at least 1 inch, and seal joints with flashing sealant.

C. Insulation Installation on Pipe Fittings and Elbows:

1. Install preformed sections of same material as straight segments of pipe insulation when available.
2. When preformed insulation elbows and fittings are not available, install mitered sections of pipe insulation, to a thickness equal to adjoining pipe insulation. Secure insulation materials with wire or bands.

D. Insulation Installation on Valves and Pipe Specialties:

1. Install preformed sections of same material as straight segments of pipe insulation when available.
2. When preformed sections are not available, install mitered sections of pipe insulation to valve body.
3. Arrange insulation to permit access to packing and to allow valve operation without disturbing insulation.
4. Install insulation to flanges as specified for flange insulation application.

3.6 FIELD-APPLIED JACKET INSTALLATION

A. Where PVC jackets are indicated, install with 1-inch overlap at longitudinal seams and end joints; for horizontal applications. Seal with manufacturer's recommended adhesive.

1. Apply two continuous beads of adhesive to seams and joints, one bead under lap and the finish bead along seam and joint edge.

3.7 FIELD QUALITY CONTROL

A. Examine pipe insulation materials before installation. Reject/insulation that is wet, moisture damaged or mold damaged.

B. Proceed with installation only after unsatisfactory conditions have been corrected.

3.8 PIPING INSULATION SCHEDULE, GENERAL

A. Acceptable preformed pipe and tubular insulation materials and thicknesses are identified for each piping system and pipe size range. If more than one material is listed for a piping system, selection from materials listed is Contractor's option.

B. Coordinate with Owner to determine where new insulation will be terminated and sealed to existing insulation.

C. Insulate supply and return valves on BL-7.

3.9 INDOOR CONDITIONED SPACE INSULATION SCHEDULE

A. Mineral-Fiber, Preformed Pipe, Type I:

Service	Temp. °F	1" and Less	1" - 1.25"	1.5" - 3"	4" – 6"	8" and Larger
Chilled Water	<60	1.5	1.5	2	2	2

3.10 INDOOR UNCONDITIONED SPACE PIPING INSULATION SCHEDULE

A. Mineral-Fiber, Preformed Pipe Insulation, Type I:

Service	Temp. °F	1" and Less	1" - 1.25"	1.5" – 3"	4" – 6"	8" and Larger
Chilled Water	<60	2.5	2.5	2.5	3.5	3.5

3.11 INDOOR, FIELD-APPLIED JACKET SCHEDULE

A. Install jacket over insulation material. For insulation with factory-applied jacket, install the field-applied jacket over the factory-applied jacket.

B. If more than one material is listed, selection from materials listed is Contractor's option.

C. Piping, Concealed:

1. None.

D. Piping, Exposed:

1. PVC: 20 mils thick.

END OF SECTION 230719
~~02/04/10~~
02/11/10

SECTION 232113 - HYDRONIC PIPING

PART 1 - GENERAL

1.1 RELATED DOCUMENTS

A. Drawings and general provisions of the Contract, including General and Supplementary Conditions and Division 01 Specification Sections, apply to this Section.

1.2 SUMMARY

A. This Section includes pipe and fitting materials, joining methods, special-duty valves, and specialties for the following:

1. Chilled-water piping.

B. Related Sections include the following:

1. Division 23 Section "Hydronic Pumps" for pumps, motors, and accessories for hydronic piping.

1.3 SUBMITTALS

A. Product Data: For each type of the following:

1. Pressure-seal fittings.
2. Valves. Include flow and pressure drop curves based on manufacturer's testing for calibrated-orifice balancing valves.
3. Hydronic specialties.

B. Shop Drawings: Detail, CAD-generated and drawn at 1/4 inch scale, the piping layout, fabrication of piping systems, hangers, valves, supports for multiple pipes, and attachments of the same to the building structure and seismic restraints. Detail location of anchors, alignment guides.

1. Fabrication, assembly, and installation including plans, elevations, sections, components, and attachments to other work.
2. Equipment installation based on equipment being used on project.
3. Piping accessories, including access panels.
4. Show coordination to existing to existing to remain building and system components.

C. Welding certificates.

D. Qualification Data: For Installer.

E. Field quality-control test reports.

F. Operation and Maintenance Data: For air control devices, hydronic specialties, and special-duty valves to include in emergency, operation, and maintenance manuals.

G. Chemical Removal Certificates: Written and signed certificates from a licensed hazardous chemical removal company.

1. Written, signed approval from the appropriate agencies, water/sewer authorities, and Owner may be substituted for chemical removal where noted herein.

1.4 QUALITY ASSURANCE

A. Steel Support Welding: Qualify processes and operators according to AWS D1.1/D1.1M, "Structural Welding Code - Steel."

B. Welding: Qualify processes and operators according to ASME Boiler and Pressure Vessel Code: Section IX.

1. Comply with provisions in ASME B31 Series, "Code for Pressure Piping."
2. Certify that each welder has passed AWS qualification tests for welding processes involved and that certification is current.

C. ASME Compliance: Comply with ASME B31.9, "Building Services Piping," for hydronic systems 250 deg F and below, for materials, products, and installation. Safety valves and pressure vessels shall bear the appropriate ASME label. Fabricate and stamp air separators and expansion tanks to comply with ASME Boiler and Pressure Vessel Code: Section VIII, Division 01.

PART 2 - PRODUCTS

2.1 STEEL PIPE AND FITTINGS

A. Steel Pipe: ASTM A 53/A 53M, black steel with plain ends; type, grade, and wall thickness as indicated in Part 3 "Piping Applications" Article.

B. Malleable-Iron Unions: ASME B16.39; Classes 150, 250, and 300 as indicated in Part 3 "Piping Applications" Article.

C. Wrought-Steel Fittings: ASTM A 234/A 234M, wall thickness to match adjoining pipe.

D. Forged-Steel Flanges and Flanged Fittings: ASME B16.5, including bolts, nuts, and gaskets of the following material group, end connections, and facings:

1. Material Group: 1.1.
2. End Connections: Butt welding.

3. Facings: Raised face.

2.2 JOINING MATERIALS

A. Pipe-Flange Gasket Materials: Suitable for chemical and thermal conditions of piping system contents.

1. ASME B16.21, nonmetallic, flat, asbestos free, 1/8-inch maximum thickness unless thickness or specific material is indicated.

a. Full-Face Type: For flat-face, Class 125, cast-iron and cast-bronze flanges.

B. Flange Bolts and Nuts: ASME B18.2.1, carbon steel, unless otherwise indicated.

C. Welding Filler Metals: Comply with AWS D10.12/D10.12M for welding materials appropriate for wall thickness and chemical analysis of steel pipe being welded.

D. Gasket Material: Thickness, material, and type suitable for fluid to be handled and working temperatures and pressures.

2.3 DIELECTRIC FITTINGS

A. Description: Combination fitting of copper-alloy and ferrous materials with threaded, solder-joint, plain, or weld-neck end connections that match piping system materials.

B. Insulating Material: Suitable for system fluid, pressure, and temperature.

C. Dielectric Couplings:

1. Manufacturers: Subject to compliance with requirements, provide products by one of the following:

a. Calpico, Inc.
b. Lochinvar Corporation.

2. Galvanized-steel coupling with inert and noncorrosive thermoplastic lining; threaded ends; and 300-psig minimum working pressure at 225 deg F.

D. Dielectric Nipples:

1. Manufacturers: Subject to compliance with requirements, provide products by one of the following:

a. Perfection Corporation; a subsidiary of American Meter Company.
b. Precision Plumbing Products, Inc.
c. Sioux Chief Manufacturing Company, Inc.

2. Electroplated steel nipple with inert and noncorrosive, thermoplastic lining; plain, threaded, or grooved ends; and 300-psig minimum working pressure at 225 deg F.

2.4 VALVES

A. Gate, Globe, Check, Ball, and Butterfly Valves: Comply with requirements specified in Division 23 Section "General-Duty Valves for HVAC Piping."

B. Automatic Temperature-Control Valves, Actuators, and Sensors: Comply with requirements specified in Division 23 Section "Instrumentation and Control for HVAC."

C. Multi-turn, Globe Style, Balancing Valves NPS 2 and Smaller:

1. Manufacturers: Subject to compliance with requirements, provide products by one of the following:

   a. Armstrong Pumps, Inc.
   b. Macon Balancing MMA.
   c. Tour & Andersson.
   d. Wheatley HVAC.

2. Body: Y-pattern, brass or copper alloy.
3. Balancing Device: Globe valve.
4. Wheel: High-strength resin.
5. Seals: EPDM.
6. End Connections: Threaded or socket.
7. Pressure Gage Connections: Threaded brass ports with check valves and gasketed caps.
8. Handle Style: Handwheel with lockable stop.
9. CWP Rating: Minimum 125 psig.
10. Maximum Operating Temperature: 250 deg F.
11. Factory moulded insulation kit.

D. Cast-Iron or Steel, Calibrated-Orifice, Balancing Valves NPS 2-1/2 to 4:

1. Manufacturers: Subject to compliance with requirements, provide products by one of the following:

   a. Bell & Gossett Domestic Pump; a division of ITT Industries.
   b. Flow Design Inc.
   c. Griswold Controls.
   d. Nexus Valve.
   e. Taco.

2. Body: Cast-iron or steel body, ball, or plug pattern with calibrated orifice or venturi.
3. Ball: Brass or stainless steel.
4. Stem Seals: EPDM O-rings.
5. Disc: Glass and carbon-filled PTFE.
6. Seat: PTFE.

7. End Connections: Flanged or grooved.
8. Pressure Gage Connections: Integral seals for portable differential pressure meter.
9. Handle Style: Lever, with memory stop to retain set position.
10. CWP Rating: Minimum 125 psig.
11. Maximum Operating Temperature: 250 deg F.
12. Factory moulded insulation kit.

E. Multi-turn, Globe Style Balancing Valves NPS 6 and Larger:

1. Manufacturers: Subject to compliance with requirements, provide products by one of the following:

   a. Armstrong Pumps, Inc.; (NPS 2-1/2 and larger).
   b. Macon Balancing MMA.
   c. Tour & Andersson; (NPS 2-1/2 and larger).
   d. Wheatley HVAC; (NPS 2-1/2 and larger).

2. Body: Cast-iron or steel, globe pattern.
3. Balancing Device: Globe valve.
4. Wheel: High-strength resin.
5. Seals: EPDM.
6. End Connections: Flanged.
7. Pressure Gage Connections: Threaded brass ports with check valves and gasketed caps.
8. Handle Style: Handwheel with lockable stop.
9. CWP Rating: Minimum 125 psig.
10. Maximum Operating Temperature: 250 deg F.
11. Factory moulded insulation kit.

2.5 AIR CONTROL DEVICES

A. Manufacturers: Subject to compliance with requirements, provide products by one of the following:

1. Amtrol, Inc.
2. Armstrong Pumps, Inc.
3. Bell & Gossett Domestic Pump; a division of ITT Industries.
4. Taco.

B. Manual Air Vents:

1. Body: Bronze.
2. Internal Parts: Nonferrous.
3. Operator: Screwdriver or thumbscrew.
4. Inlet Connection: NPS 1/2.
5. Discharge Connection: NPS 1/8.
6. CWP Rating: 150 psig.
7. Maximum Operating Temperature: 225 deg F.

C. Automatic Air Vents:

1. Body: Bronze.
2. Internal Parts: Nonferrous.
3. Operator: Noncorrosive metal float.
4. Inlet Connection: NPS 1/8 to 1/2.
5. Discharge Connection: NPS 1/4.
6. CWP Rating: 150 psig.
7. Maximum Operating Temperature: 240 deg F.

2.6 HYDRONIC PIPING SPECIALTIES

A. Y-Pattern Strainers:

1. Body: ASTM A 126, Class B, cast iron with bolted cover and bottom drain connection.
2. End Connections: Threaded ends for NPS 2 and smaller; flanged ends for NPS 2-1/2 and larger.
3. Strainer Screen: 40-mesh startup strainer, and perforated stainless-steel basket with 50 percent free area.
4. CWP Rating: 125 psig.

B. Basket Strainers:

1. Body: ASTM A 126, Class B, high-tensile cast iron with bolted cover and bottom drain connection.
2. End Connections: Threaded ends for NPS 2 and smaller; flanged ends for NPS 2-1/2 and larger.
3. Strainer Screen: 40-mesh startup strainer, and perforated stainless-steel basket with 50 percent free area.
4. CWP Rating: 125 psig.

PART 3 - EXECUTION

3.1 PIPING APPLICATIONS

A. Chilled-water piping, aboveground, NPS 2 and smaller, shall be the following:

1. Schedule 40 steel pipe; Class 150, malleable-iron flanges and flange fittings; and threaded joints with cast-iron fittings.

B. Chilled-water piping, aboveground, NPS 2-1/2 and larger, shall be the following:

1. Schedule 40 steel pipe, wrought-steel fittings and forged-steel flanges and flange fittings, and welded and flanged joints.

C. Air-Vent Piping:

1. Inlet: Same as service where installed with metal-to-plastic transition fittings for plastic piping systems according to the piping manufacturer's written instructions.
2. Outlet: Type K, annealed-temper copper tubing with soldered or flared joints.

3.2 VALVE APPLICATIONS

A. Install shutoff-duty valves at each branch connection to supply and return mains, and at connection to each piece of equipment.

B. Install calibrated, balancing valves in the return pipe of each heating or cooling terminal.

C. Install drain valves at low points in mains, risers, branch lines, and elsewhere as required for system drainage.

3.3 PIPING INSTALLATIONS

A. Drawing plans, schematics, and diagrams indicate general location and arrangement of piping systems. Indicate piping locations and arrangements if such were used to size pipe and calculate friction loss, expansion, pump sizing, and other design considerations. Install piping as indicated unless deviations to layout are approved on Coordination Drawings.

B. Install piping in concealed locations, unless otherwise indicated and except in equipment rooms and service areas.

C. Install piping indicated to be exposed and piping in equipment rooms and service areas at right angles or parallel to building walls. Diagonal runs are prohibited unless specifically indicated otherwise.

D. Install piping above accessible ceilings to allow sufficient space for ceiling panel removal.

E. Install piping to permit valve servicing.

F. Install piping at indicated slopes.

G. Install piping free of sags and bends.

H. Install fittings for changes in direction and branch connections.

I. Install piping to allow application of insulation.

J. Select system components with pressure rating equal to or greater than system operating pressure.

K. Install groups of pipes parallel to each other, spaced to permit applying insulation and servicing of valves.

L. Install drains, consisting of a tee fitting, NPS 3/4 ball valve, and short NPS 3/4 threaded nipple with cap, at low points in piping system mains and elsewhere as required for system drainage.

M. Install piping at a uniform grade of 0.2 percent upward in direction of flow.

N. Reduce pipe sizes using eccentric reducer fitting installed with level side up.

O. Install branch connections to mains using tee fittings in main pipe, with the branch connected to the bottom of the main pipe. For up-feed risers, connect the branch to the top of the main pipe.

P. Install valves according to Division 23 Section "General-Duty Valves for HVAC Piping."

Q. Install unions in piping, NPS 2 and smaller, adjacent to valves, at final connections of equipment, and elsewhere as indicated.

R. Install flanges in piping, NPS 2-1/2 and larger, at final connections of equipment and elsewhere as indicated.

S. Install strainers on inlet side of each control valve, pressure-reducing valve, solenoid valve, in-line pump, and elsewhere as indicated. Install NPS 3/4 nipple and ball valve in blowdown connection of strainers NPS 2 and larger. Match size of strainer blowoff connection for strainers smaller than NPS 2.

T. Remove and replace strainer baskets on all existing strainers (one upstream of control valve for each bank of coils). Gasket on access cap may contain asbestos. Coordinate with Owner for testing of each gasket and removal of all asbestos. Abatement shall be performed at the Owner's expense. See Section 232113.2.6.B.3 for basket specification.

U. Install unions in pipes 2 inches NPS and smaller, adjacent to each valve, at final connections of each piece of equipment, and elsewhere as indicated. Unions are not required at flanged connections.

V. Install flanges on valves, apparatus, and equipment having 2 inches NPS and larger connections.

W. Install dielectric fitting at all joints of dissimilar materials. Joining method of fittings to conform to applicable sections within this specification based on line size, pipe material and service.

~~U.Install flanges on valves, apparatus, and equipment having 2 inches NPS and larger connections.~~

~~V.~~X. Identify piping as specified in Division 23 Section "Identification for HVAC Piping and Equipment."

3.4 HANGERS AND SUPPORTS

A. Hanger, support, and anchor devices are specified in Division 23 Section "Hangers and Supports for HVAC Piping and Equipment." Comply with the following requirements for maximum spacing of supports. Piping supports must account for expansion and contraction, vibration, seismic restraint, and dead load of piping and its contents.

B. Install the following pipe attachments:

1. Adjustable steel clevis hangers for individual horizontal piping less than 20 feet long.
2. Adjustable roller hangers and spring hangers for individual horizontal piping 20 feet or longer.
3. Provide copper-clad hangers and supports for hangers and supports in direct contact with copper pipe.

C. Install hangers for steel piping with the following maximum spacing and minimum rod sizes and in accordance with MSS-SP-69:

1. NPS 3/4: Maximum span, 7 feet; minimum rod size, 3/8inch.
2. NPS 1: Maximum span, 7 feet; minimum rod size, 3/8inch.
3. NPS 1-1/4: Maximum span, 7 feet; minimum rod size, 3/8 inch.
4. NPS 1-1/2: Maximum span, 9 feet; minimum rod size, 3/8 inch.
5. NPS 2: Maximum span, 10 feet; minimum rod size, 3/8 inch.
6. NPS 2-1/2: Maximum span, 11 feet; minimum rod size, 3/8 inch.
7. NPS 3: Maximum span, 12 feet; minimum rod size, 3/8 inch.
8. NPS 4: Maximum span, 14 feet; minimum rod size, 1/2 inch.
9. NPS 6: Maximum span, 17 feet; minimum rod size, 1/2 inch.
10. NPS 8: Maximum span, 19 feet; minimum rod size, 5/8 inch.

3.5 PIPE JOINT CONSTRUCTION

A. Join pipe and fittings according to the following requirements and Division 23 Sections specifying piping systems.

B. Ream ends of pipes and tubes and remove burrs. Bevel plain ends of steel pipe.

C. Remove scale, slag, dirt, and debris from inside and outside of pipe and fittings before assembly.

D. Threaded Joints: Thread pipe with tapered pipe threads according to ASME B1.20.1. Cut threads full and clean using sharp dies. Ream threaded pipe ends to remove burrs and restore full ID. Join pipe fittings and valves as follows:

1. Apply appropriate tape or thread compound to external pipe threads unless dry seal threading is specified.
2. Damaged Threads: Do not use pipe or pipe fittings with threads that are corroded or damaged. Do not use pipe sections that have cracked or open welds.

E. Welded Joints: Construct joints according to AWS D10.12/D10.12M, using qualified processes and welding operators according to Part 1 "Quality Assurance" Article.

F. Flanged Joints: Select appropriate gasket material, size, type, and thickness for service application. Install gasket concentrically positioned. Use suitable lubricants on bolt threads.

3.6 HYDRONIC SPECIALTIES INSTALLATION

A. Install manual air vents at high points in piping, at heat-transfer coils, and elsewhere as required for system air venting.

B. Extend vent and drain lines from coils to outside AHU casing. Locate vents and drains outside casing insulation.

C. Insulate vent and drain piping ~~a~~in accordance with Division 23 section “HVAC Piping Insulation”.

3.7 TERMINAL EQUIPMENT CONNECTIONS

A. Sizes for supply and return piping connections shall be the same as or larger than equipment connections.

B. Install ports for pressure gages and thermometers at coil inlet and outlet connections and at locations requiring gages and thermometers according to Division 23 Section "Meters and Gages for HVAC Piping."

3.8 CHEMICAL DISPOSAL

A. Removal of Chemicals from Site: Chemicals will be disposed of off-site by a licensed hazardous chemical waste company.

1. Provide written and signed certification of proper disposal.

B. Alternative Disposal: If all approvals and acceptances are obtained, chemicals may be disposed of through the building sanitary system.

1. Written and Signed Approvals/Acceptances:

a. Owner
b. Water/Sewer Authority
c. Other Authorities Having Jurisdiction

2. Monitoring: Effluent shall be continually monitored during all disposal events for all restrictive allowable variables (e.g., ph level) outlined in the specific approvals and acceptances gained.

3.9 FIELD QUALITY CONTROL

A. Prepare hydronic piping according to ASME B31.9 and as follows:

1. Leave joints, including welds, uninsulated and exposed for examination during test.

2. Chemically clean and flush hydronic piping systems with clean water; then remove and clean or replace strainer screens. After cleaning and flushing hydronic piping systems, but before balancing, remove disposable fine-mesh strainers in pump suction diffusers.
3. Isolate equipment from piping. Install valves, caps or blinds in flanged joints at final equipment connection points to isolate equipment. If a valve is used to isolate equipment, its closure shall be capable of sealing against test pressure without damage to valve.
4. Install safety valve, set at a pressure no more than one-third higher than test pressure, to protect against damage by expanding liquid or other source of overpressure during test.

B. Perform the following tests on hydronic piping:

1. Use ambient temperature water as a testing medium unless there is risk of damage due to freezing. Another liquid that is safe for workers and compatible with piping may be used.
2. While filling system, use vents installed at high points of system to release air. Use drains installed at low points for complete draining of test liquid.
3. Isolate expansion tanks and determine that hydronic system is full of water.
4. Subject piping system up to equipment final connection points to hydrostatic test pressure of 1.5 times the system's working pressure, minimum 100 psig, but shall not exceed maximum pressure for any vessel, pump, valve, or other component in system under test. Verify that stress due to pressure at bottom of vertical runs does not exceed 90 percent of specified minimum yield strength or 1.7 times "SE" value in Appendix A in ASME B31.9, "Building Services Piping." Expansion joints which cannot sustain the reactions due to test pressure shall be provided with temporary restraint, or shall be isolated from testing.
5. After hydrostatic test pressure has been applied for at least 10 minutes, examine piping, joints, and connections for leakage. Eliminate leaks by tightening, repairing, or replacing components and repeat hydrostatic test until there are no leaks.
6. Prepare written report of testing.

C. Test and inspect field welds as follows:

1. Testing Agency: Owner will engage a qualified independent testing and inspecting agency to perform field inspections and tests, and to prepare test reports. Contractor shall bear all costs associated with Field Testing and Inspection.
2. Provide the testing agency and the Engineer safe access to the site throughout the duration of the piping installation. Notify the testing agency and the Engineer a minimum of 48 hours prior to the start of welding.
3. Field welds will be tested and inspected according to ASME B31.9 for hydronic distribution systems 350 psig and/or 250 deg F and below, and the inspection procedures listed below:

    a. Visual Inspection: Visual inspection on 100 percent of all field pipe welds. The percentage of welds inspected will be 10%, and may be modified by the Engineer of Record, depending on initial results. Witness of the actual welding by the testing agency to occur on a minimum of 15 percent of all field welds.

4. Correct deficiencies in or remove and replace welds that test reports and inspections indicate do not comply with the Contract Documents at no additional cost to the Owner.
5. Additional testing and inspection, at Contractor's expense, will be performed by the Owner's testing agency to determine compliance of corrected work with specified requirements.

D. Perform the following before operating the system:

1. Open manual valves fully.
2. Inspect air vents at high points of system and determine if all are installed and operating freely (automatic type), or bleed air completely (manual type).
3. Set temperature controls so all coils are calling for full flow.

END OF SECTION 232113
~~02/04/10~~02/11/10

SECTION 238216 - AIR COILS

PART 1 - GENERAL

1.1 RELATED DOCUMENTS

A. Drawings and general provisions of the Contract, including General and Supplementary Conditions and Division 1 Specification Sections, apply to this Section.

1.2 SUMMARY

A. This Section includes the following types of air coils that are not an integral part of air-handling units:

1. Chilled-water.

B. Related Sections include the following:

1. Division 23 Sections for air coils that are integral to air-handling units.

1.3 SUBMITTALS

A. Product Data: Air coils shall be furnished by UCHC. Section 2 of this document is for reference only. Contractor shall comply with Sections 1 and 3.

B. Coordination Drawings: Plans, drawn to scale, on which coil location and AHU components are shown and coordinated with each other.

C. Field quality-control test reports.

D. Operation and Maintenance Data: For air coils to include in operation and maintenance manuals.

1.4 QUALITY ASSURANCE

A. ASHRAE Compliance:

1. Comply with ASHRAE 33 for methods of testing cooling and heating coils.
2. Comply with applicable requirements in ASHRAE 62.1-2004, Section 5 - "Systems and Equipment" and Section 7 - "Construction and Startup."

PART 2 - PRODUCTS

2.1 WATER COILS

A. Manufacturers: Subject to compliance with requirements, provide products by one of the following:

1. USA Coil & Air.

B. Performance Ratings: Tested and rated according to ARI 410 and ASHRAE 33.

C. Minimum Working-Pressure/Temperature Ratings: 200 psig, 325 deg F.

D. Source Quality Control: Factory tested to 300 psig.

E. Tubes: ASTM B 743 copper, minimum 0.025 inch thick with “freeze plugs” at every bend.

F. Fins: Aluminum, minimum 0.006 inch thick.

G. Headers: Seamless copper tube with brazed joints, prime coated with “freeze plugs”.

H. Frames: Galvanized-steel channel frame, minimum 0.052 inch thick for slip-in mounting.

PART 3 - EXECUTION

3.1 EXAMINATION

A. Examine AHUs to receive air coils for compliance with requirements for installation tolerances, coordination with Structural work, and other conditions affecting coil performance.

B. Examine roughing-in for piping systems to verify actual locations of piping connections before coil installation.

C. Proceed with installation only after unsatisfactory conditions have been corrected.

3.2 TRANSPORT AND INSTALLATION

A. Air coils are to be furnished by UCHC and delivered to Contractor’s place of business. Contractor shall inspect coils for any damage prior to acceptance and notify Owner of any deficiencies prior to transportation to UCHC.

B. Contractor shall then transport to UCHC and to the appropriate AHU for installation. Contractor shall consult with UCHC to determine the route and method of transport from UCHC loading dock to the point of installation. Air coils shall not be stored at UCHC loading dock. Coils to remain in packaging until delivered to AHU.

C. Install coils level and plumb.

D. Install coils in AHU casings constructed according to Division 23 section for HVAC Casings.

E. Existing moisture eliminators for cooling coils shall remain. Provide attachment of existing moisture eliminators to new casings in a manner similar to existing conditions.

F. Straighten bent fins on air coils.

G. Clean coils using materials and methods recommended in writing by manufacturers, and clean inside of casings and enclosures to remove dust and debris.

H. Existing temperature sensor elements shall be removed and reinstalled. Test and confirm operation prior to removal. Remove and store elements during coil replacement. Reinstall elements and tie in to Carrier Controls. Test and confirm operation after installation in the Owner's presence.

3.3 CONNECTIONS

A. Piping installation requirements are specified in other Division 15 Sections. Drawings indicate general arrangement of piping, fittings, and specialties.

B. Install piping adjacent to coils to allow service and maintenance.

C. Connect water piping with unions and shutoff valves to allow coils to be disconnected without draining piping. Control valves are specified in Division 15 Section "HVAC Instrumentation and Controls," and other piping specialties are specified in Division 15 Section "Hydronic Piping." Provide balancing valves on return side for each coil.

D. Ground equipment in accordance to local code requirements for "Grounding and Bonding."

3.4 FIELD QUALITY CONTROL

A. Perform the following field tests and inspections and prepare test reports:
   1. Operational Test: Operate electric coils to confirm proper unit operation.
   2. Balance coils to provide indicated flow.
   3. Test and adjust controls and safeties. Replace damaged and malfunctioning controls and equipment.

END OF SECTION 238216
~~02/04/10~~02/11/10

PROPOSAL

S. L. COOKE

February 9, 2010

COMPANY, INC.

Since 1936

81 SCHOOL GROUND ROAD – PO BOX 350
BRANFORD, CT 06405
PH: (203) 488-2571 FAX: (203) 488-5426
e-mail: slcookeinc@sbcglobal.net

Tom Wisehart
UCONN Health Center
263 Farmington Avenue
Farmington, CT 06030

SHIPMENT: 4 - 5 Weeks

FOB: Factory
Freight Allowed

TERMS: NET 30 DAYS

QTY	DESCRIPTION	PRICE
	RE: Chilled Water Coil Project - Coil Weights & Configurations by Blower	
40	USA Coil & Air Sentry Guard Chilled Water Coils to replace existing Coils in the following Air Handlers as per schedule: • Blower 7 - 4 Coils - 650# each - 2 High x 2 Wide • Blower 47 - 8 Coils - 390# each - 4 High x 2 Wide • Blower 48 - 3 Coils - 550# each - 3 High x 1 Wide • Blower 51 - 8 Coils - 470# each - 4 High x 2 Wide • Blower 55 - 6 Coils - 370# each - 3 High x 2 Wide • Blower 56 - 8 Coils - 390# each - 4 High x 2 Wide • Blower 58 - 1 Coil - 200# • Blower 63 - 3 Coils - 750# each - 3 High x 1 wide Coil Construction: 5/8" OD x .025 Wall Copper Tubes, .006 Aluminum Fins, Copper Headers and Connections, 16 Gauge Galvanized Steel Casing. All Coils to have Vents and Drains on Each Header. Coils to be individually crated and labeled.	

THIS PROPOSAL SUBJECT TO TERMS AND CONDITIONS OF THE MANUFACTURER OF PRODUCTS PROPOSED

BY: _____, Charles M. Murphy, Jr.

1. GENERAL

2. THE PROJECT DRAWINGS AND SPECIFICATIONS ARE BASED ON THE CONSTRUCTION SPECIFICATIONS INSTITUTE (CSI) DOCUMENTATION FORMAT. SPECIFICATION AND DRAWING CONTENTS ARE ARRANGED BY TOPIC AND CATEGORY AND ARE NOT INTENDED TO AWARD DIVISION OF WORK.

3. THE INTENT OF THESE DOCUMENTS IS FOR THE MEP TRADES TO FURNISH AND INSTALL COMPLETE MECHANICAL SYSTEMS. THE SPECIFIED SYSTEMS SHALL BE COMPLETE IN ALL RESPECTS; OPERATIONAL, TESTED, ADJUSTED, CALIBRATED, APPROVED BY THE AUTHORITIES HAVING JURISDICTION AND READY FOR BENEFICIAL USE BY THE OWNER.

4. THE TRADES SHALL OBTAIN AND REVIEW ALL CONTRACT DOCUMENTS BEFORE SUBMITTING A BID. INFORMATION IS PROVIDED ON THE VARIOUS DRAWINGS, SCHEDULES, SPECIFICATIONS AND ALL OF THE VARIOUS DOCUMENTS IN THE BIDDING PACKAGE. THE CONTRACT DOCUMENTS ARE COMPLEMENTARY AND FORM A TOTAL PROJECT DESIGN AND INFORMATION SOURCE FOR CONSTRUCTION PURPOSES.

5. THE DRAWINGS ARE DIAGRAMMATIC AND INDICATE THE GENERAL ARRANGEMENT OF SYSTEMS AND WORK INCLUDED IN THE CONTRACT. COORDINATE LOCATIONS OF EQUIPMENT WITH OTHER TRADES BEFORE AND DURING CONSTRUCTION. ANY MODIFICATION TO THE EQUIPMENT LAYOUT, REQUIRED FOR INSTALLATION, IS TO BE PERFORMED UNDER THE CONTRACT AGREEMENT, AT NO ADDITIONAL COST.

6. THE EXACT LOCATION AND MOUNTING HEIGHTS OF VARIOUS EQUIPMENT SHALL BE VERIFIED IN THE FIELD.

7. PERFORM ALL WORK IN COMPLIANCE WITH THE SPECIFICATIONS APPLICABLE CODES, ORDINANCES AND THE REGULATORY AGENCIES HAVING JURISDICTION; THE SPECIFICATIONS MAY EXCEED THE REQUIREMENTS OF THE CODE; IN WHICH CASE, THE SPECIFICATION MUST BE FOLLOWED.

8. INSTALL ALL EQUIPMENT IN ACCESSIBLE LOCATIONS.

9. WHERE A CONFLICT OCCURS BETWEEN THE DOCUMENTS, IT SHALL BE BROUGHT TO THE ATTENTION OF THE ENGINEER; CARRY AS PART OF THE BID THE LARGER QUANTITY AND/OR MORE EXPENSIVE ITEM(S).

10. BEFORE INSTALLATION, COORDINATE THE WORK WITH OWNER-FURNISHED EQUIPMENT; INCLUDING REQUIRED SERVICE CONNECTIONS, FACTORY START UPS, AND INSTALLATION OF FIELD DEVICES.

11. PROVIDE THE REQUIRED/SPECIFIED SLEEVES AND SEALS FOR PIPES OR CONDUIT PENETRATING AHU CASINGS.

12. INSTALL FLOOR-MOUNTED EQUIPMENT ON A CONCRETE HOUSEKEEPING PAD.

13. PROVIDE MEP COORDINATION DRAWINGS AS REQUIRED IN THE SPECIFICATIONS.

14. PROVIDE PIPING, CONDUIT, AND ALL OTHER ACCESSORIES AS REQUIRED FOR PROPER AND PROFESSIONAL SYSTEMS INSTALLATION.

15. TEST AND BALANCE ALL MECHANICAL AND ELECTRICAL SYSTEMS. PROVIDE ADDITIONAL TESTS AS REQUIRED BY THE SPECIFICATIONS.

16. DO NOT INSTALL PIPINGOVER ELECTRICAL PANELS, TRANSFORMERS, SPECIAL EQUIPMENT, ELEVATOR MACHINE ROOMS OR SHAFTS.

17. PROVIDE ADDITIONAL TRANSITIONS AND OFFSETS IN ALL PIPING OR CONDUIT FOR COORDINATION WITH BUILDING STRUCTURE AND CONSTRUCTION.

18. ALL HYDRONIC PIPING SHALL BE 3/4" UNLESS OTHERWISE NOTED ON PLANS, RISERS, OR SCHEDULES.

19. PIPING SHALL BE SUPPORTED FROM STRUCTURE ABOVE. TO MAXIMIZE HEAD ROOM, INSTALL PIPING TIGHT TO BOTTOM OF BEAMS WHEN RUNNING PERPENDICULAR TO BEAM; INSTALL PIPING TIGHT TO FLOOR SLAB WHEN RUNNING PARALLEL TO BEAM; PROVIDE ALL NECESSARY FITTINGS AND TRANSITIONS.

20. PROVIDE AIR VENTS AT ALL HIGH POINTS AND DRAINS AT ALL LOW POINTS.

BVH integrated services
50 Griffin Road South
Bloomfield, CT 06002
Tel: (860) 286-9171
Fax: (860) 242-0236
CIVIL, STRUCTURAL, MECHANICAL,
ELECTRICAL, COMMISSIONING AND TECHNOLOGY

1 ADDENDUM NO. 1 2/11/10	Date 2/4/10	Sheet Title GENERAL NOTES	UCHC PROJECT PR10-037
	Scale NOT TO SCALE		Reference Drawing
	Drawn DHE / Check JRD	Project Name UCHC COOLING COIL REPLACEMENT 1	Sheet Number SKH-000
	Project Number 2109140		

NOTES:

1. REMOVE SUPPLY AND RETURN HEADERS, ALL BRANCH PIPING TO COILS.
2. REMOVE COOLING COIL SECTION OF AHU CASING. TOP AND BOTTOM CASING PANEL TO REMAIN.
3. REMOVE COILS, COIL SUPPORTS AND ALL BLANK OFF PANELS.
4. STAINLESS STEEL DRIP PANS TO REMAIN.
5. REMOVE SPRAY PUMP, PIPING, DISTRIBUTION ASSEMBLY. CAP EXISTING PUMP SUCTION LINE. OVERFLOW LINE TO REMAIN. 1
6. ** REFER TO INDIVIDUAL PIPING DETAILS FOR LIMITS OF NEW WORK.
7. REMOVE AND RE-INSTALL TEMPERATURE SENSORS AT INTAKE OF COILS. 1

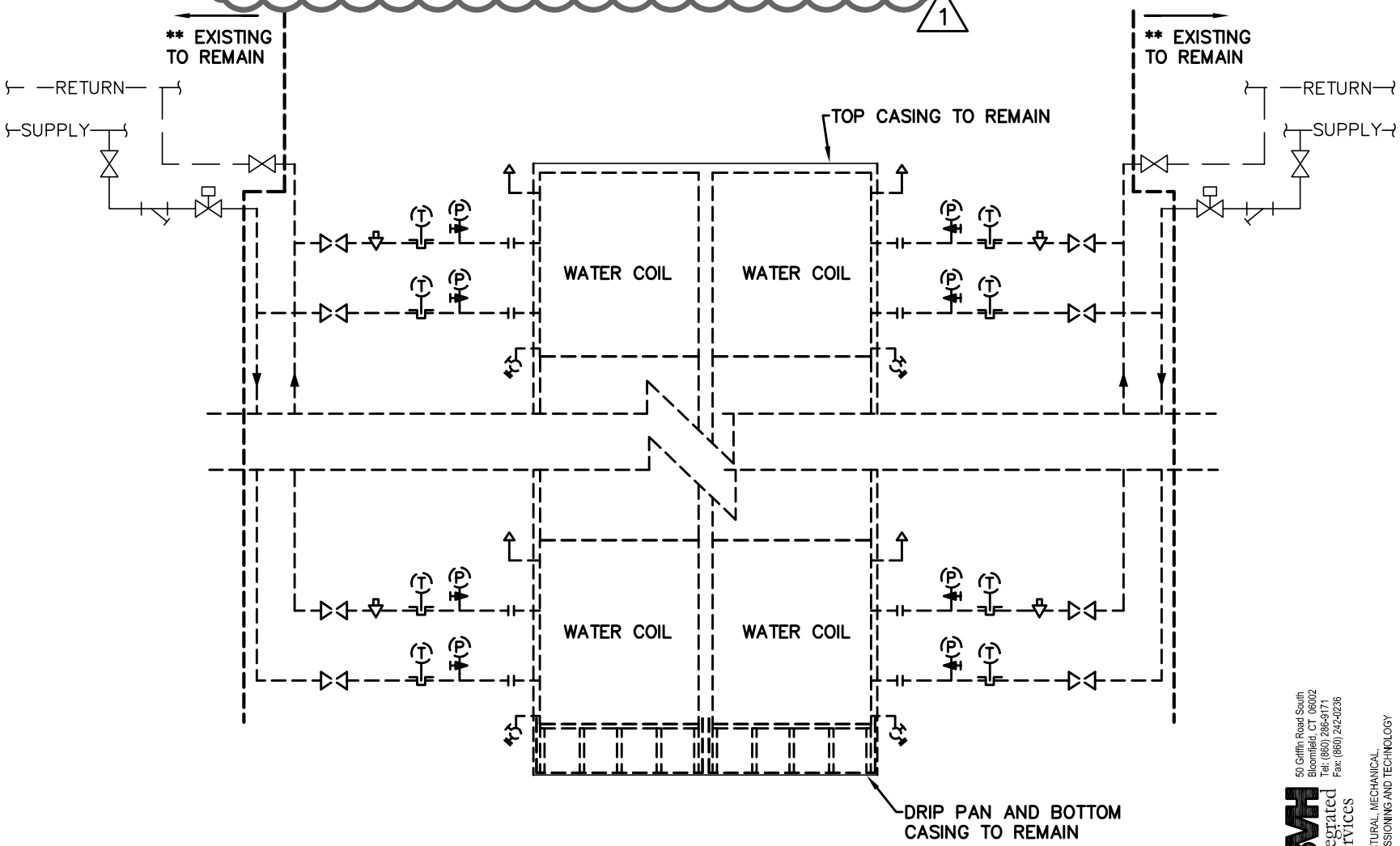

STACKED AHU WATER COIL DEMOLITION DETAIL

NOT TO SCALE

BVH integrated services
50 Griffin Road South
Bloomfield, CT 06002
Tel: (860) 286-9171
Fax: (860) 242-0236
CIVIL, STRUCTURAL, MECHANICAL, ELECTRICAL, COMMISSIONING AND TECHNOLOGY

1 ADDENDUM NO. 1 2/11/10

UCHC Project #	PR10-037
Reference Drawing	
Sheet Number	SKH-001
Sheet Title	COIL DEMOLITION DETAIL
Project Name	UCHC COOLING COIL REPLACEMENT
Date	2/4/10
Scale	NOT TO SCALE
Drawn	DHE
Check	JRD
Project Number	2109140

AHU	HEADER SIZE	* COIL CONNECTION
BL-7	4"	2.5"
BL-47	4"	2"
BL-48	5"	2.5"
BL-51	5"	2"
BL-55	4"	2"
BL-56	4"	2"
BL-58	2"	2"
BL-63	5"	3"

* REFER TO INDIVIDUAL COIL DETAILS FOR BRANCH SIZES

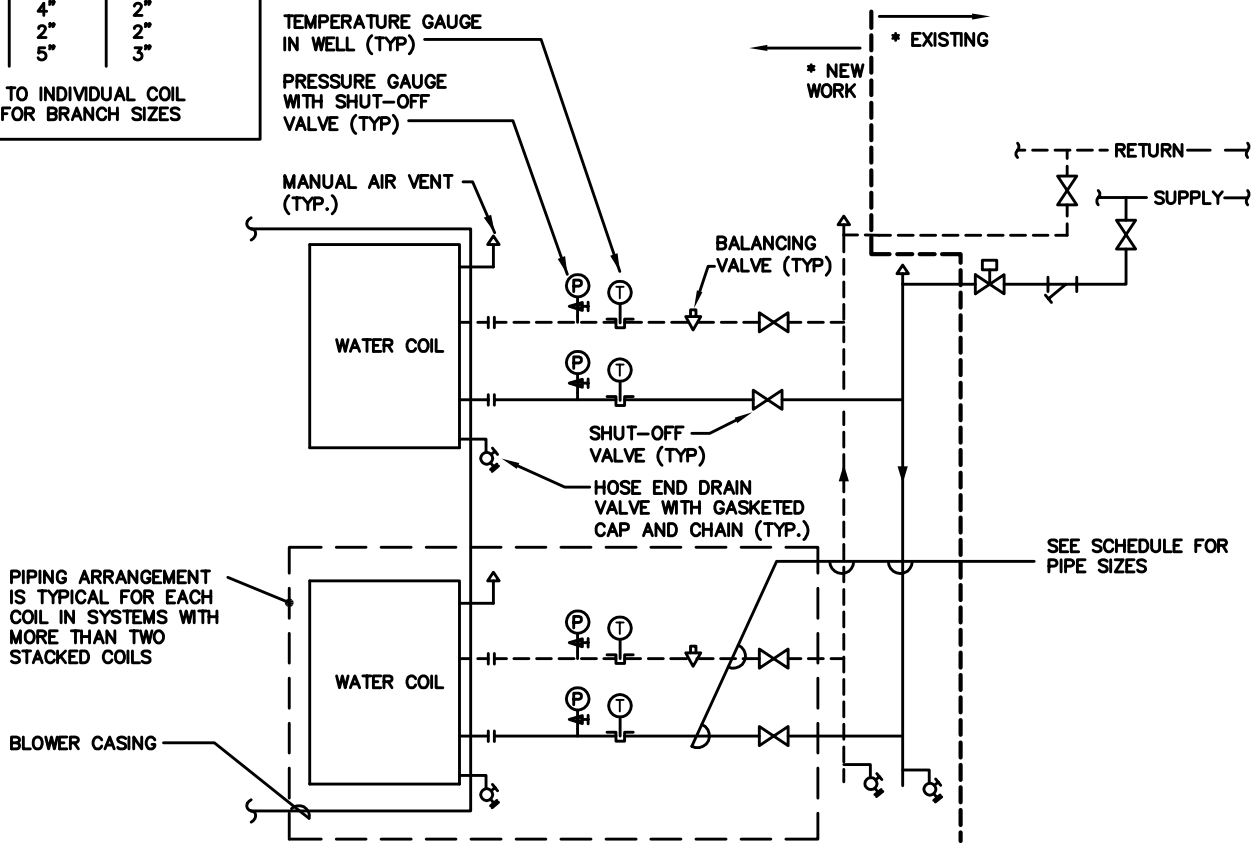

NOTES:

- PROVIDE UNIONS IN LIEU OF FLANGES AT VALVE AND COIL CONNECTIONS WHERE APPLICABLE.
- PROVIDE COIL SUPPORT FRAME AND LATERAL SUPPORT PER STRUCTURAL DOCUMENTS.
- PROVIDE BLANK OFF REMOVABLE PANELS ON UPSTREAM SIDE OF COILS.
- REFER TO SPECIFICATIONS FOR SPECIFIC MATERIAL AND CONSTRUCTION REQUIREMENTS.
- PROVIDE NEW COIL SECTION CASING. NEW AHU CASING CONSTRUCTION MATERIALS AND DETAILING PER SPECIFICATIONS.
- * REFER TO INDIVIDUAL PIPING DETAILS FOR LIMITS OF NEW WORK.
- EXTEND COIL VENT AND DRAIN TO OUTSIDE OF BLOWER CASING.
- PROVIDE NEW DRAIN LINE FOR CONDENSATE PAN. INSTALL AT LOW POINT OF PAN AND RUN TO NEAREST FLOOR DRAIN.
- RE-INSTALL EXISTING TEMPERATURE SENSOR AT INTAKE SIDE OF NEW COIL.
- EXTEND EXISTING PAN OVERFLOW DRAIN LINE TO NEAREST FLOOR DRAIN, IF NOT EXISTING.

1

STACKED AHU WATER COIL PIPING DETAIL

NOT TO SCALE

BVH integrated services
50 Griffin Road South
Bloomfield, CT 06002
Tel: (860) 286-9171
Fax: (860) 242-0236
CIVIL, STRUCTURAL, MECHANICAL, ELECTRICAL, COMMISSIONING AND TECHNOLOGY

1 ADDENDUM NO. 1 2/11/10	Date 2/4/10	Sheet Title COIL NEW WORK DETAIL	UCHC Project # PR10-037
	Scale NOT TO SCALE		Reference Drawing
	Drawn DHE / Check JRD	Project Name UCHC COOLING COIL REPLACEMENT	Sheet Number SKH-002
	Project Number 2109140		

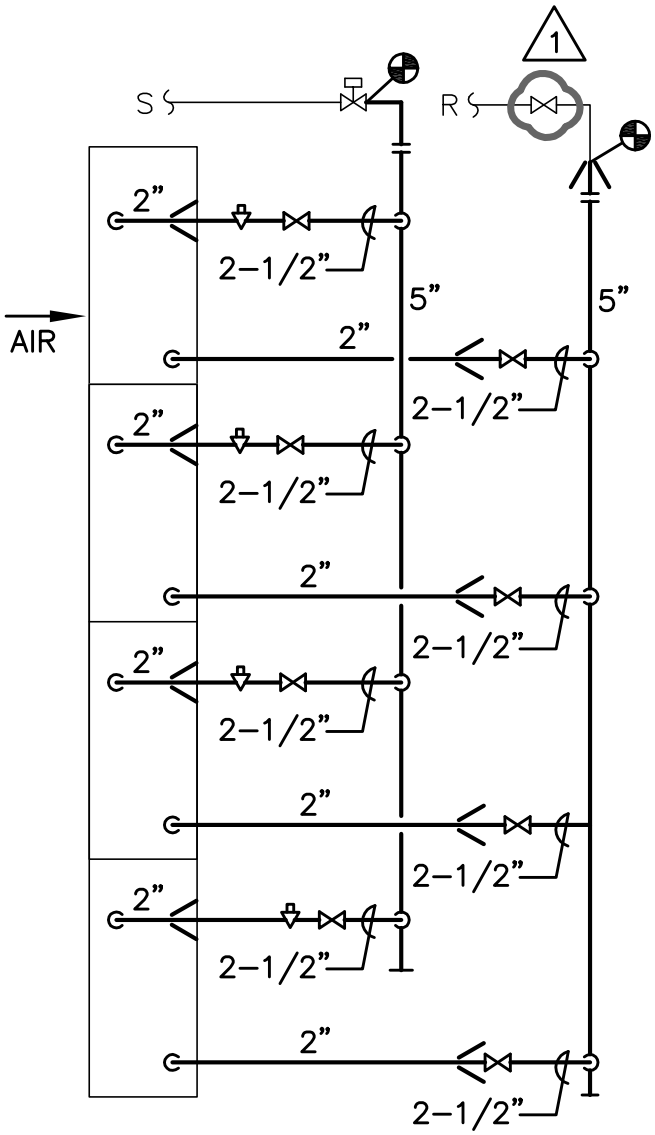

LEFT SIDE

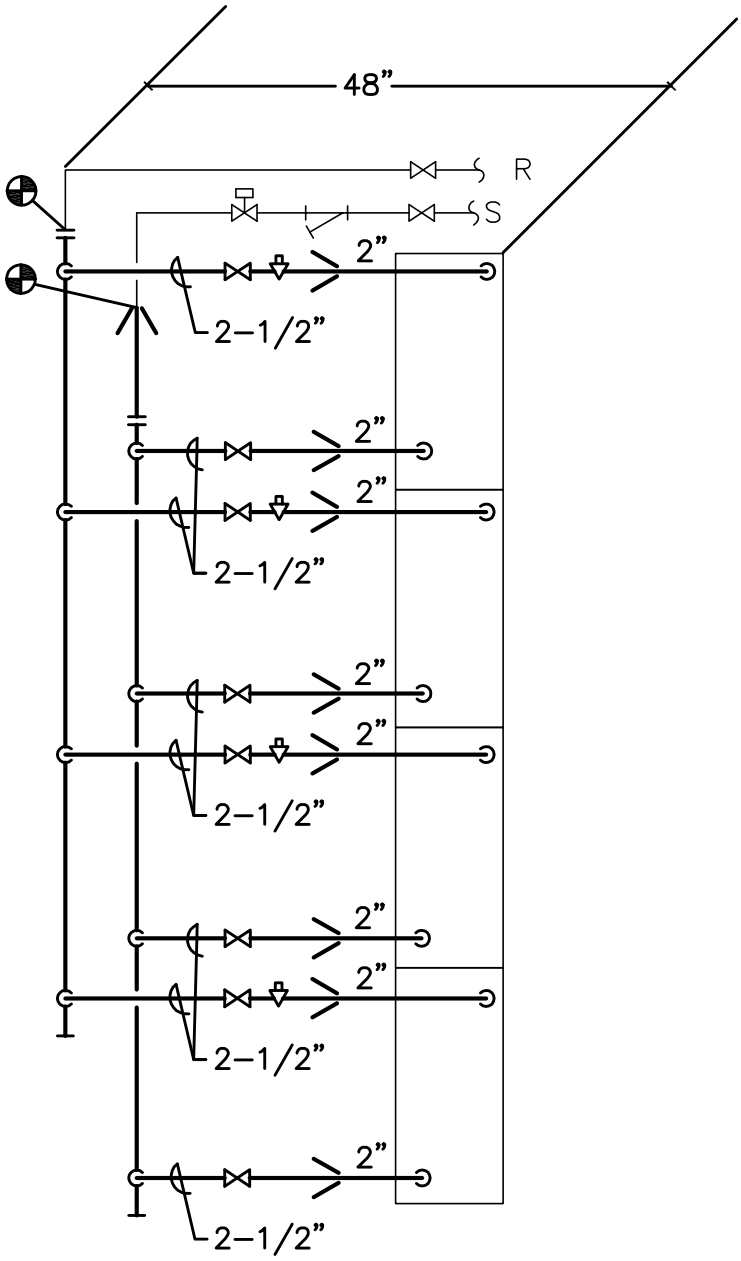

RIGHT SIDE

BVH integrated services
50 Griffin Road South
Bloomfield, CT 06002
Tel: (860) 286-9171
Fax: (860) 242-0236
CIVIL, STRUCTURAL, MECHANICAL,
ELECTRICAL, COMMISSIONING AND TECHNOLOGY

REFER TO SKH–002 FOR PIPING DETAILS
DIMENSIONS TO BE FIELD VERIFIED.

1 ADDENDUM NO. 1 2/11/10	Date 2/4/10	Sheet Title BL-51	UCHC PROJECT PR10-037
	Scale NOT TO SCALE		Reference Drawing
	Drawn DHE / Check JRD	Project Name UCHC COOLING COIL REPLACEMENT	Sheet Number SKH-006
	Project Number 2109140		

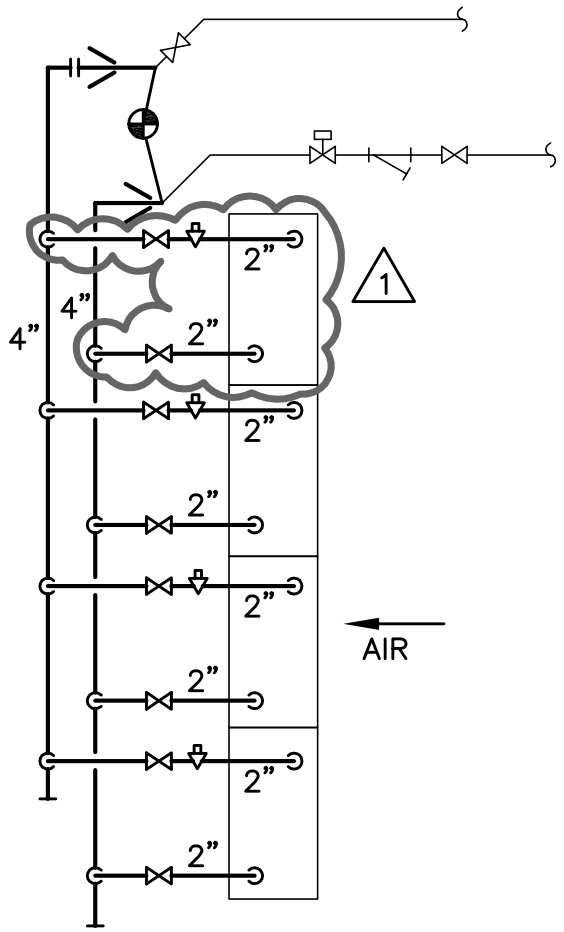

LEFT SIDE

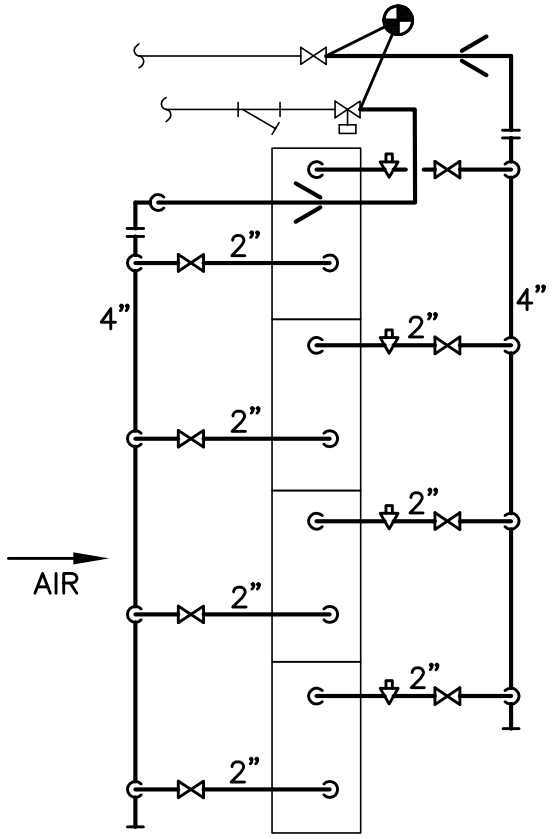

RIGHT SIDE

BVH integrated services
50 Griffin Road South
Bloomfield, CT 06002
Tel: (860) 286-9171
Fax: (860) 242-0236
CIVIL, STRUCTURAL, MECHANICAL,
ELECTRICAL, COMMISSIONING AND TECHNOLOGY

REFER TO SKH–002 FOR PIPING DETAILS
DIMENSIONS TO BE FIELD VERIFIED.

1 ADDENDUM NO. 1 2/11/10	Date 2/4/10	Sheet Title BL-56	UCHC PROJECT PR10-037
	Scale NOT TO SCALE		Reference Drawing
	Drawn DHE / Check JRD	Project Name UCHC COOLING COIL REPLACEMENT	Sheet Number SKH-008
	Project Number 2109140		

INVITATION TO BID

FCL-1 Rev. 5/07

Jennifer K. Kelley
Purchasing Services Officer

jkk1011@adp.uchc.edu
Email address

STATE OF CONNECTICUT

UNIVERSITY OF CONNECTICUT HEALTH CENTER
FACILITY CONTRACTS & LEASES
263 Farmington Avenue, MC4039
Farmington, CT 06032
860-679-1988

Acknowledgment: Receipt of Bid Documents
Fax to 860-284-5872

Please return this acknowledgement as soon as possible, so your company can be added to the bidders' list for this project and be sure to receive any addenda or other information regarding the bid.

Bid Number	Bid Due Date	Due Date Time
FCL-02-00111	**February 17, 2009**	**2:30 PM**
Bid Title:	**Cooling Coil Replacement**	

Please check one of the following boxes: ☐ Submitting proposal ☐ NOT submitting proposal

Print or type the following information:

Company name: _____

Address: _____

City or Town: _____

Phone: _____

Fax: _____

Received by: _____

email: _____

State of Connecticut

University of Connecticut Health Center

BID NUMBER:
FCL-02-00111

BIDDER'S CHECKLIST

READ CAREFULLY

IT IS SUGGESTED THAT YOU REVIEW AND CHECK OFF EACH ACTION AS YOU COMPLETE IT.

☐ 1. **Complete and return** "Acknowledgement: Receipt of Bid Documents" (Form FCL-1)

☐ 2. The Proposal (FCL-3, FCL-5) must be signed by a duly authorized representative of the company. Unsigned Proposals will automatically be rejected.

☐ 3. The Proposal Schedule (FCL-4) must be included with your Proposal and contain the following:

- ☐ a. VENDORS NAME MUST BE IN THE UPPER RIGHT CORNER OF ALL PROPOSAL SCHEDULE PAGES.
- ☐ b. The Proposal prices you have offered have been reviewed and verified.
- ☐ c. The price extensions and totals have been checked. (In case of discrepancy between unit prices and total prices, the unit price will govern the Proposal evaluation).
- ☐ d. Any errors, alterations, corrections or erasures to unit prices, total prices, etc. must be initialed by the person who signs the proposal or his designee. Such changes made and not initialed mean automatic rejection of proposal.
- ☐ e. The payment terms are Net 30 Days (You may offer cash discounts for prompt payment). Cash Discounts for Net Terms less than 30 days may be considered when evaluating Proposal pricing. Exception: State of CT Small Business Set-Aside bids payment terms shall be in accordance with CGS 4a-60j.
- ☐ f. The delivery information block has been completed. Be specific: In most cases, "as ordered" or "as required" is not complete information.

☐ 4. Any technical or descriptive literature, drawing or Proposal samples that are required have been included with the Proposal.

☐ 5. Applicable Vendor Affidavits (see accompanying table) must be signed, notarized (where applicable), and returned with Proposal. Failure to do so may result in Proposal rejection.

☐ 6. If required the amount of Proposal surety has been checked and the surety has been included.

☐ 7. Form FCL-5 (CHRO Compliance) must be completed entirely regardless of the number of employees (even if the company is family owned and/or operated) and must be submitted with each Proposal. Non-compliance may result in Proposal rejection.

☐ 8. Any addenda (FCL-9, FCL-10) to the bid have been signed and included.

☐ 9.. MAKE SURE TO INCLUDE THE ORIGINAL PROPOSAL SCHEDULE (FCL-4) ALONG WITH ONE COPY (unless more copies are requested within the bid specifications).

☐ 10. The bid number on the pre-addressed mailing label or on your hand marked return envelope exactly matches the bid number inside the envelope.

☐ 11. The pre-addressed mailing label has been used on your Proposal envelope or the Proposal envelope has been addressed as follows:

SEALED BID NO: **FCL-02-00111**

NOT TO BE OPENED UNTIL: **February 17, 2010 at 2:30 PM**

MAIL PROPOSAL TO:
JENNIFER KELLEY
UNIVERSITY OF CONNECTICUT HEALTH CENTER
OFFICE OF FACILITY CONTRACTS & LEASES
MUNSON ROAD FACILITY 3rd FLOOR - ROOM P3042
263 FARMINGTON AVENUE
FARMINGTON CT 06032

☐ 12. Hand-delivered Proposals are to be presented at **University of Connecticut Health Center, Department of Facility Contracts & Leases, 3rd Floor, 16 Munson Road, Farmington, CT 06032.**

☐ 13. The Proposal is to be mailed or hand-delivered in-time to be received no later than the designated opening date and time. Late Proposals are not accepted under any circumstances. Please allow enough time if mailing in your Proposal.

THIS FORM IS NOT TO BE RETURNED WITH YOUR PROPOSAL

INVITATION TO BID
FCL-3 Rev. 8/07
Previous Rev. 5/07

Jennifer K. Kelley
Purchasing Services Officer
860-679-1988
Telephone Number

STATE OF CONNECTICUT

UNIVERSITY OF CONNECTICUT HEALTH CENTER
DEPARTMENT OF FACILITY CONTRACTS & LEASES
263 Farmington Avenue, MC 4039
Farmington, CT 06032

Bid Number:
FCL-02-00111

Read & Complete Carefully

BID NO:	BID DUE DATE:	BID DUE TIME:	BID SURETY:	DATE ISSUED:
FCL-02-00111	February 17, 2009	2:30 PM	See Proposal Schedule	February 1, 2010

DESCRIPTION: **Cooling Coil Replacement** (Project #10-037)

FOR: **UConn Health Center** | **TERM OF CONTRACT:** **One time**

Invitation to Bid: Pursuant to the provisions of Section 10a-151b of the General Statutes of Connecticut as amended, sealed proposals will be received by the Department of Facility Contracts & Leases of the University of Connecticut Health Center, at the address above for furnishing the commodities and/or services.

NOTE: Bidder means Individual/Sole Proprietor, Partnership or Corporation Name

IMPORTANT: ALL pages of this form, Sections 1 through 2 must be completed, signed and returned by the bidder as part of the bid package. Failure to submit all pages of this form may constitute grounds for rejection of your bid.

SECTION 1 of 2: *BIDDER INFORMATION*

COMPLETE BIDDER LEGAL BUSINESS NAME:	TAXPAYER ID # (TIN): ☐ SSN ☐ FEIN WRITE/TYPE SSN/FEIN NUMBER ABOVE

AFFIRMATION OF BIDDER

The above named bidder fully acknowledges and agrees with all the terms and conditions contained within the entire Invitation to Bid (Bid) document. Including but not limited to: The accompanying Bid proposal schedule, specifications, requirements and/or scope. Further, if the above named bidder is awarded a contract for the goods and/or services contained within this Bid, the bidder's signature on Form FCL-3 shall bind the bidder to all of the terms and conditions including but not limited to the aforementioned documents, including the bidder's formal response, which in total become the contract.

That should any part of this proposal be accepted in writing by Director of Purchasing within ninety (90) calendar days from the date of Bid opening, unless an earlier date for acceptance is specified by bidder in proposal schedule, said bidder will furnish and deliver the commodities and/or services to the state agency or agencies named, for which this proposal is made, in the quantities and at the prices bid, and in compliance with the provisions set forth in the terms and conditions of Forms FCL-7, the proposal schedule and commodity specification Form FCL-4. Should award of any part of this proposal be delayed beyond the period of ninety (90) days or an earlier date specified by bidder in proposal schedule, such award shall be conditioned upon bidder's acceptance.

Written signature of Person Authorized to sign on behalf of the above named Bidder: SIGN HERE	Date Executed
Type or Print Name of Authorized Person	Title of Authorized Person
Is your business **currently** a DAS *Certified* Small Business Enterprise?	☐ YES (Attach a copy of Certificate) ☐ NO
If you are a *State Employee*, indicate your position, agency, and agency address:	

Jennifer K. Kelley
Purchasing Services Officer

860-679-1988
Telephone Number

STATE OF CONNECTICUT

UNIVERSITY OF CONNECTICUT HEALTH CENTER
FACILITY CONTRACTS & LEASES
263 Farmington Avenue, MC 4039
Farmington, CT 06032

THIS FORM AND REQUIRED PROPOSAL SCHEDULE FORMS MUST BE RETURNED

Read & Complete Carefully

BID NO: FCL-02-00111

SECTION 1of 2 –*BIDDER INFORMATION* (Continued)

	Bidder's Address	**Remittance Address** (☐ **Same as Bidder Address**)	
No. and Street			
City, State , Zip Code			
Contact Person		Web Address	
Telephone Number		Cell Number	
Fax Number			

Business entity: ☐ LLC ☐ non-profit ☐ partnership: ☐ individual/sole proprietorship
☐ CORPORATION TYPE OF CORPORATION: State Organized in:

Note: If Individual/Sole Proprietor, Individual's Name (As Owner) Must Appear in the Legal Business Name Block above.

Business type: A. sales of commodities b. medical services c. attorney fees d. rental of property (real estate & equipment)
E. other (describe in detail)

Under this TIN, what is the primary type of business you provide the state? (enter letter from above)	
Under this TIN, what other types of business might you provide the state? (enter letter from above)	

For Purchase Order Distribution: 1) Check only one box below 2) Input e-mail address or Fax # (if checked)

☐ E-mail ☐ Fax ☐ USPS Mail

Name:	
E-Mail Address:	
Telephone Number:	

For Invitation to Bid (Bid) Distribution: 1) Check only one box below 2) Input e-mail address or Fax # (if checked)

☐ E-mail ☐ Fax ☐ USPS Mail

Add further Business Address, E-mail & Contact Information below if required

INVITATION TO BID FCL-4 Rev. 5/07 Previous Rev. 12/04 **Jennifer K. Kelley** *Purchasing Services Officer* **860-679-1988** *Telephone Number*	**STATE OF CONNECTICUT** **UNIVERSITY OF CONNECTICUT HEALTH CENTER** **FACILITY CONTRACTS & LEASES** **263 Farmington Avenue, MC 4039** **Farmington, CT 06032** **Proposal Schedule** **Page 1 of 5** **Payment terms are net 30 days after receipt of invoice.** **Any deviation may result in proposal rejection.** **Bid prices shall include all transportation charges FOB University of Connecticut Health Center.**	**Bid Number:** FCL-02-00111 Delivery: **Terms:** Cash Discount: % # Days **Bidder Name:** **SSN or FEIN #:**

Item no.	Description of commodity and/or services	Qty.	Unit	Unit Price	Total Price
	Project Title: Cooling Coil Replacement **Project Number**: **10-037** **<u>Mandatory prebid will be held at 9:00 AM on Monday, February 8, 2010 in Facilities Management Conference Room A, in the sub-basement of the main building at 263 Farmington Avenue, Farmington, CT 06032.</u>** Bidders are advised to park in shuttle lot 3 and take the shuttle to the academic entrance, and take the elevator at the left rear of the lobby to the Sub-Basement. Facilities Management office is to the right of the elevator. <u>Prospective bidders should come to the prebid meeting with all subcontractors who will need to see the inside the air handling units, which will be shut down at the time of the walkthrough.</u> Additional visits will be possible but the inside of the units will not be accessible, as the units will be in operation. **Plans and specifications will be available for purchase from Joseph Merritt & Company, 650 Franklin Ave, Hartford, CT. Phone: 860-296-2500.** Provide all labor, material and equipment required to complete the work reflected on plans and specifications dated February 4, 2010. The work includes, but shall not be limited to the following: • Remove existing cooling coils, supports and attachments, evaporative spray • System, external coil headers and branch piping, AHU coils section casing. • Replace cooling coils with new coils of matching capacity. • Replace exterior coil headers and branch piping to coils. Include isolation and				

INVITATION TO BID FCL-4 Rev. 5/07 Previous Rev. 12/04 **Jennifer K. Kelley** *Purchasing Services Officer* **860-679-1988** *Telephone Number*	**STATE OF CONNECTICUT** **UNIVERSITY OF CONNECTICUT HEALTH CENTER** **FACILITY CONTRACTS & LEASES** **263 Farmington Avenue, MC 4039** **Farmington, CT 06032** **Proposal Schedule** **Page 2 of 5** **Payment terms are net 30 days after receipt of invoice.** **Any deviation may result in proposal rejection.** **Bid prices shall include all transportation charges FOB University of Connecticut Health Center.**	**Bid Number:** FCL-02-00111 Delivery: **Terms:** Cash Discount: % # Days **Bidder Name:** **SSN or FEIN #:**

Item no.	Description of commodity and/or services	Qty.	Unit	Unit Price	Total Price

	• Balancing valves. Connect new piping to existing piping as shown in drawings.
	• Provide new supports and safing as required. Allow means for removal for servicing.
	• Condensate pan to remain. Provide new condensate drain from pan to nearest floor drain.
	• Provide new AHU side casing with penetrations required for new services.
	• Construction and attachment to be similar to existing.
	• Flush and clean new work. Balance flow to coils.
	• Rebalance AHU supply fan
	• All related demolition, removal and disposal of all associated materials as well as reconstruction of areas required to make the project complete.
	
	<u>Bidders note:</u>
	1. In accordance with C.G.S §4a-100, all Bidders shall be prequalified by the DAS Contractor Prequalification Program before they can bid on a contract or perform work pursuant to a contract for the construction, reconstruction, alteration, remodeling, repair or demolition of any public building or any other public work by the state or a municipality, which is funded in whole or in part with state funds..
	2. As well as the standard submission requirements listed on the checklist at the start of the bid package, the following forms must also be completed and submitted with your bid. They are located in the specification book:
	  • The Bid Form document which includes the pricing information, unit pricing, subdivision of contract price, schedule of values and contractors' certification.
	  • The AIA Documents "Contractor's Qualification				

INVITATION TO BID FCL-4 Rev. 5/07 Previous Rev. 12/04 **Jennifer K. Kelley** *Purchasing Services Officer* **860-679-1988** *Telephone Number*	**STATE OF CONNECTICUT** **UNIVERSITY OF CONNECTICUT HEALTH CENTER** **FACILITY CONTRACTS & LEASES** **263 Farmington Avenue, MC 4039** **Farmington, CT 06032** **Proposal Schedule** **Page 3 of 5** **Payment terms are net 30 days after receipt of invoice.** **Any deviation may result in proposal rejection.** **Bid prices shall include all transportation charges FOB University of Connecticut Health Center.**	**Bid Number:** FCL-02-00111 Delivery: **Terms:** Cash Discount: % # Days **Bidder Name:** **SSN or FEIN #:**

Item no.	Description of commodity and/or services	Qty.	Unit	Unit Price	Total Price
	Statement" and Financials 3. Pursuant to UCHC Background & Federal Sanctions Checks Policy No. 2001-3, Contractors, who provide equipment, materials, supplies, and contractual services to UCHC, must successfully pass Office of the Inspector General (OIG) federal sanction and State of Connecticut debarment checks to be eligible for contract awards. In addition, the UCHC Public Safety Department requires contractor personnel to successfully complete a Security Background Check prior to performing on-site services. **The UCHC Public Safety Department instituted a fee of $75.00 for each background check completed.** The fee is payable in advance and shall accompany the submission of the applicable Background Information Sheet. 4. Contractors who perform services on site must provide a Certificate of Insurance prior to performing the work. The UCHC should be shown as Additional Insured in the "Description of Operations" section. The "Certificate Holder" should be "UConn Health Center, 263 Farmington Avenue, Farmington, CT 06032." All bidders must agree to carry sufficient worker's compensation and liability insurance in a company licensed to do business in Connecticut and to furnish certificates of insurance should award be made to said bidder for the contract of this construction. All bidders must agree and warrant that in the performance of this contract, he/she will not discriminate or permit discrimination against any person or group of persons on the grounds of race, color, religious creed, age, marital status, national origin, ancestry, sex, mental retardation, sexual orientation or physical disability, including, but not limited to, blindness, unless it is shown by				

INVITATION TO BID FCL-4 Rev. 5/07 Previous Rev. 12/04 **Jennifer K. Kelley** *Purchasing Services Officer* **860-679-1988** *Telephone Number*	**STATE OF CONNECTICUT** **UNIVERSITY OF CONNECTICUT HEALTH CENTER** **FACILITY CONTRACTS & LEASES** **263 Farmington Avenue, MC 4039** **Farmington, CT 06032** **Proposal Schedule** **Page 4 of 5** **Payment terms are net 30 days after receipt of invoice.** **Any deviation may result in proposal rejection.** **Bid prices shall include all transportation charges FOB University of Connecticut Health Center.**	**Bid Number:** FCL-02-00111 Delivery: **Terms:** Cash Discount: % # Days **Bidder Name:** **SSN or FEIN #:**

Item no.	Description of commodity and/or services	Qty.	Unit	Unit Price	Total Price
	such Contractor that such disability prevents performance of the work involved in any manner, prohibited by the laws of the United States or the State of Connecticut, and further agrees to provide the Commission on Human Rights and Opportunities (CHRO) with such information requested by the Commission concerning the employment practices and procedures of the Contractor as they relate to the provisions of this section. If required, the wages paid on an hourly basis to any mechanic, laborer, or workman employed on the work herein contracted to be done and the amount of payment or contribution paid or payable on behalf of each such employee to any employee welfare fund shall be a rate equal to the rate customary or prevailing for the same work in the same trade or occupation in the town in which such public works project is being constructed. State of Connecticut Prevailing Wages apply when the cost of a renovation project equals or exceeds One Hundred Thousand Dollars and new construction equals or exceeds Four Hundred Thousand Dollars. Each contractor who is awarded a contract on or after October 15, 2002 shall be subject to provisions of the Connecticut General Statutes, Section 31-53 as amended by Public Act 02-69, "An Act Concerning Annual Adjustments to Prevailing Wages." Wage rates will be posted each August 1st on the Department of Labor website: www.ctdol.state.ct.us. Such prevailing wage adjustments will not be considered a basis for an annual contract amendment. A copy of the current Prevailing Wage rates is attached. A 10% Bid Bond is required with the bid submittal.				

INVITATION TO BID FCL-4 Rev. 5/07 Previous Rev. 12/04 **Jennifer K. Kelley** *Purchasing Services Officer* **860-679-1988** *Telephone Number*	**STATE OF CONNECTICUT** **UNIVERSITY OF CONNECTICUT HEALTH CENTER** **FACILITY CONTRACTS & LEASES** **263 Farmington Avenue, MC 4039** **Farmington, CT 06032** **Proposal Schedule** **Page 5 of 5** **Payment terms are net 30 days after receipt of invoice.** **Any deviation may result in proposal rejection.** **Bid prices shall include all transportation charges FOB University of Connecticut Health Center.**	**Bid Number:** FCL-02-00111 Delivery: **Terms:** Cash Discount: % # Days **Bidder Name:** **SSN or FEIN #:**

Item no.	Description of commodity and/or services	Qty.	Unit	Unit Price	Total Price
	A 100% Performance Bond and a 100% Labor and Material Bond shall be furnished by the bidder awarded the contract, and shall be in an amount of 100% of the contract price. Bidder awarded the contract shall have ten (10) days After Receipt of Order to submit bonds to the Director of Facility Contracts & Leases. Upon request, the bidder shall submit information including but not limited to, company financial status; list of completed projects for the current year beginning in January, and two (2) previous years; references from each completed project including owner name and phone number; and all other informational requests. Failure to provide such information shall lead to rejection of bid. No changes to these specifications are to be acknowledged without the written authority of the Department of Facility Contracts & Leases. Project Manager: Thomas Wisehart, Campus Planning Tel: 860-679-7937 Email: Wisehart@adp.uchc.edu Direct all questions via email to: Jennifer Kelley, Purchasing Officer Tel: 860-679-1988 Email: jkk1011@adp.uchc.edu				

Minimum Rates and Classifications
for Building Construction

B 13173

Connecticut Department of Labor
Wage and Workplace Standards Division

By virtue of the authority vested in the Labor Commissioner under provisions of Section 31-53 of the General Statutes of Connecticut, as amended, the following are declared to be the prevailing rates and welfare payments and will apply only where the contract is advertised for bid within 20 days of the date on which the rates are established. Any contractor or subcontractor not obligated by agreement to pay to the welfare and pension fund shall pay this amount to each employee as part of his/her hourly wages.

Project Number 10-037 Project Town Farmington
State#: FAP#

Project: Cooling Coil Replacement At The Uconn Health Center

CLASSIFICATION	Hourly Rate	Benefits
1a) Asbestos Worker/Insulator (Includes application of insulating materials, protective coverings, coatings, & finishes to all types of mechanical systems; application of firestopping material for wall openings & penetrations in walls, floors, ceilings - Last updated 9/1/08	34.21	19.81
1b) Asbestos/Toxic Waste Removal Laborers: Asbestos removal and encapsulation (except its removal from mechanical systems which are not to be scrapped), toxic waste removers, blasters.**See Laborers Group 7**		
2) Boilermaker	34.94	19.00

As of: **Monday, February 01, 2010**

Project: Cooling Coil Replacement At The Uconn Health Center

3a) Bricklayer, Cement Mason, Concrete Finisher (including caulking), Stone Masons	32.18	20.44 + a
3b) Tile Setter	30.78	16.98
3c) Terrazzo Workers, Marble Setters - Last updated 10/1/08	30.91	19.12
3d) Tile, Marble & Terrazzo Finishers	24.90	14.78
3e) Plasterer	32.18	20.44

------LABORERS------

As of: **Monday, February 01, 2010**

Project: Cooling Coil Replacement At The Uconn Health Center

4) Group 1: Laborers (common or general), carpenter tenders, wrecking laborers, fire watchers.	24.25	14.45
4a) Group 2: Mortar mixers, plaster tender, power buggy operators, powdermen, fireproofer/mixer/nozzleman, fence erector.	24.50	14.45
4b) Group 3: Jackhammer operators, mason tender (brick) and mason tender (cement/concrete)	24.75	14.45
4c) **Group 4: Pipelayers (Installation of water, storm drainage or sewage lines outside of the building line with P6, P7 license) (the pipelayer rate shall apply only to one or two employees of the total crew who primary task is to actually perform the mating of pipe sections)[If using this classification call the Labor Department for clarification] Last updated 4/8/09	25.25	14.45
4d) Group 5: Air track operators, Sand blasters - Last updated 4/8/09	25.00	14.45
4e) Group 6: Nuclear toxic waste removers, blasters - Last updated 4/8/09	27.25	14.45

As of: **Monday, February 01, 2010**

Project: Cooling Coil Replacement At The Uconn Health Center

4f) Group 7: Asbestos removal and encapsulation (except it's removal from mechanical systems which are not to be scrapped) - Last updated 4/5/09	25.25	14.45
4g) Group 8: Bottom men on open air caisson, cylindrical work and boring crew - Last updated 4/8/09	24.75	14.45
4h) Group 9: Top men on open air caisson, cylindrical work and boring crew - Last updated 4/8/09	24.25	14.45
5) Carpenter, Acoustical Ceiling Installation, Soft Floor/Carpet Laying, Metal Stud Installation, Form Work and Scaffold Building, Drywall Hanging, Modular-Furniture Systems Installers, Lathers, Piledrivers, Resilient Floor Layers.	29.00	17.80
5a) Millwrights	29.75	17.80
6) Electrical Worker (including low voltage wiring) (Trade License required: E1,2 L-5,6 C-5,6 T-1,2 L-1,2 V-1,2,7,8,9)	35.40	19.51

As of: **Monday, February 01, 2010**

Project: Cooling Coil Replacement At The Uconn Health Center

7a) Elevator Mechanic (Trade License required: R-1,2,5,6)	42.34	18.285+a+b

-----LINE CONSTRUCTION----

Groundman	22.67	6.50% + 6.20
Linemen/Cable Splicer	41.22	6.5% + 12.20
8) Glazier (Trade License required: FG-1,2)	31.73	14.55 + a
9) Ironworker, Ornamental, Reinforcing, Structural, and Precast Concrete Erection	32.75	25.08 + a

As of: **Monday, February 01, 2010**

Project: Cooling Coil Replacement At The Uconn Health Center

----OPERATORS----

Group 1: Crane handling or erecting structural steel or stone, hoisting engineer 2 drums or over, front end loader (7 cubic yards or over); work boat 26 ft. and over. (Trade License Required)	34.05	17.75 + a
Group 2: Cranes (100 ton rate capacity and over); Backhoe/Excavator over 2 cubic yards; Piledriver ($3.00 premium when operator controls hammer). (Trade License Required)	33.73	17.75 + a
Group 3: Excavator, Backhoe/Excavator under 2 cubic yards; Cranes (under 100 ton rated capacity), Grader/Blade; Master Mechanic; Hoisting Engineer (all types of equipment where a drum and cable are used to hoist or drag material regardless of motive power of operation), Rubber Tire Excavator (Drott-1085 or similar);Grader Operator; Bulldozer Fine Grade. (slopes, shaping, laser or GPS, etc.).	32.99	17.75 + a
Group 4: Trenching Machines; Lighter Derrick; Concrete Finishing Machine; CMI Machine or Similar; Koehring Loader (Skooper).	32.60	17.75 + a
Group 5: Specialty Railroad Equipment; Asphalt Paver; Asphalt Reclaiming Machine; Line Grinder; Concrete Pumps; Drills with Self Contained Power Units; Boring Machine; Post Hole Digger; Auger; Pounder; Well Digger; Milling Machine (over 24" Mandrell)	32.01	17.75 + a

As of: **Monday, February 01, 2010**

Project: Cooling Coil Replacement At The Uconn Health Center

Group 5 continued: Side Boom; Combination Hoe and Loader; Directional Driller.	32.01	17.75 + a
Group 6: Front End Loader (3 up to 7 cubic yards); Bulldozer (rough grade dozer).	31.70	17.75 + a
Group 7: Asphalt roller, concrete saws and cutters (ride on types), vermeer concrete cutter, Stump Grinder; Scraper; Snooper; Skidder; Milling Machine (24" and under Mandrell).	31.36	17.75 + a
Group 8: Mechanic, grease truck operator, hydroblaster; barrier mover; power stone spreader; welding; work boat under 26 ft.; transfer machine.	30.96	17.75 + a
Group 9: Front end loader (under 3 cubic yards), skid steer loader regardless of attachments, (Bobcat or Similar): forklift, power chipper; landscape equipment (including Hydroseeder).	30.53	17.75 + a
Group 10: Vibratory hammer; ice machine; diesel and air, hammer, etc.	28.49	17.75 + a

As of: **Monday, February 01, 2010**

Project: Cooling Coil Replacement At The Uconn Health Center

Group 11: Conveyor, earth roller, power pavement breaker (whiphammer), robot demolition equipment.	28.49	17.75 + a
Group 12: Wellpoint operator.	28.43	17.75 + a
Group 13: Compressor battery operator.	27.85	17.75 + a
Group 14: Elevator operator; tow motor operator (solid tire no rough terrain).	26.71	17.75 + a
Group 15: Generator Operator; Compressor Operator; Pump Operator; Welding Machine Operator; Heater Operator.	26.30	17.75 + a
Group 16: Maintenance Engineer/Oiler.	25.65	17.75 + a

As of: **Monday, February 01, 2010**

Group 17: Portable asphalt plant operator; portable crusher plant operator; portable concrete plant operator.	29.96	17.75 + a
Group 18: Power safety boat; vacuum truck; zim mixer; sweeper; (Minimum for any job requiring a CDL license).	27.54	17.75 + a

------PAINTERS (Including Drywall Finishing)------

10a) Brush, Roller	28.17	14.55
10b) Taper/Drywall Finisher	28.92	14.55
10c) Paperhanger	28.67	14.55

Project: Cooling Coil Replacement At The Uconn Health Center

10e) Spray	31.17	14.55
11) Plumber (excluding HVAC pipe installation) (Trade License required: P-1,2,6,7,8,9 J-1,2,3,4 SP-1,2)	36.32	21.26
12) Post Digger, Well Digger, Pile Testing Machine	32.01	17.75 + a
13) Roofer (composition)	31.10	14.46
14) Roofer (slate & tile)	31.60	14.46
15) Sheetmetal Worker (Trade License required for HVAC and Ductwork: SM-1,SM-2,SM-3,SM-4,SM-5,SM-6)	31.57	25.92

As of: **Monday, February 01, 2010**

Project: Cooling Coil Replacement At The Uconn Health Center

16) Pipefitter (Including HVAC work) (Trade License required: S-1,2,3,4,5,6,7,8 B-1,2,3,4 D-1,2,3,4, G-1, G-2, G-8 & G-9)	36.32	21.26

------TRUCK DRIVERS------

17a) 2 Axle	26.98	13.48 + a
17b) 3 Axle, 2 Axle Ready Mix	27.08	13.48 + a
17c) 3 Axle Ready Mix	27.13	13.48 + a
17d) 4 Axle, Heavy Duty Trailer up to 40 tons	27.18	13.48 + a

As of: **Monday, February 01, 2010**

Project: Cooling Coil Replacement At The Uconn Health Center

17e) 4 Axle Ready Mix	27.23	13.48 + a
17f) Heavy Duty Trailer (40 Tons and Over)	27.43	13.48 + a
17g) Specialized Earth Moving Equipment (Other Than Conventional Type on-the-Road Trucks and Semi-Trailers, Including Euclids)	27.23	13.48 + a
18) Sprinkler Fitter (Trade License required: F-1,2,3,4)	40.30	16.25 + a

As of: **Monday, February 01, 2010**

Project: Cooling Coil Replacement At The Uconn Health Center

Welders: Rate for craft to which welding is incidental.

**Note: Hazardous waste removal work receives additional $1.25 per hour for truck drivers.*

***Note: Hazardous waste premium $3.00 per hour over classified rate*

Crane with 150 ft. boom (including jib) - $1.50 extra
Crane with 200 ft. boom (including jib) - $2.50 extra
Crane with 250 ft. boom (including jib) - $5.00 extra
Crane with 300 ft. boom (including jib) - $7.00 extra
Crane with 400 ft. boom (including jib) - $10.00 extra

All classifications that indicate a percentage of the fringe benefits must be calculated at the percentage rate times the "base hourly rate".

Apprentices duly registered under the Commissioner of Labor's regulations on "Work Training Standards for Apprenticeship and Training Programs" Section 31-51-d-1 to 12, are allowed to be paid the appropriate percentage of the prevailing journeymen hourly base and the full fringe benefit rate, providing the work site ratio shall not be less than one full-time journeyperson instructing and supervising the work of each apprentice in a specific trade.

The Prevailing wage rates applicable to this project are subject to annual adjustments each July 1st for the duration of the project.

Each contractor shall pay the annual adjusted prevailing wage rate that is in effect each July 1st, as posted by the Department of Labor.

It is the contractor's responsibility to obtain the annual adjusted prevailing wage rate increases directly from the Department of Labor's website.

The annual adjustments will be posted on the Department of Labor's Web page: www.ct.gov/dol

The Department of Labor will continue to issue the initial prevailing wage rate schedule to the Contracting Agency for the project.

All subsequent annual adjustments will be posted on our Web Site for contractor access.

As of: **Monday, February 01, 2010**

Project: Cooling Coil Replacement At The Uconn Health Center

Effective October 1, 2005 - Public Act 05-50: any person performing the work of any mechanic, laborer, or worker shall be paid prevailing wage

All Person who perform work ON SITE must be paid prevailing wage for the appropriate mechanic, laborer, or worker classification.

All certified payrolls must list the hours worked and wages paid to All Persons who perform work ON SITE regardless of their ownership i.e.: (Owners, Corporate Officers, LLC Members, Independent Contractors, et. al)
Reporting and payment of wages is required regardless of any contractual relationship alleged to exist between the contractor and such person.

~~Unlisted classifications needed for work not included within the scope of the classifications listed may be added after award only as provided in the labor standards contract clause (29 CFR 5.5 (a) (1) (ii)).

Please direct any questions which you may have pertaining to classification of work and payment of prevailing wages to the Wage and Workplace Standards Division, telephone (860)263-6790.

As of: **Monday, February 01, 2010**

CONNECTICUT DEPARTMENT OF LABOR
WAGE AND WORKPLACE STANDARDS DIVISION

CONTRACTORS WAGE CERTIFICATION FORM

I,_____of _____
Officer, Owner, Authorized Rep. Company Name

do hereby certify that the _____
Company Name

_____
Street

_____
City

and all of its subcontractors will pay all workers on the

_____
Project Name and Number

_____
Street and City

the wages as listed in the schedule of prevailing rates required for such project (a copy of which is attached hereto).

_____
Signed

Subscribed and sworn to before me this _____ day of _____,

_____
Notary Public

☞ Return to:

Connecticut Department of Labor
Wage & Workplace Standards Division
200 Folly Brook Blvd.
Wethersfield, CT 06109

Sec. 31-53b. **Construction safety and health course**. **Proof of completion required for employees on public building projects. Enforcement. Regulations**. (a) Each contract entered into on or after July 1, 2007, for the construction, remodeling, refinishing, refurbishing, rehabilitation, alteration or repair of any public building project by the state or any of its agents, or by an political subdivision of the state or any of its agents, where the total cost of all work to be performed by all contractors and subcontractors in connection with the contract is at least one hundred thousand dollars, shall contain a provision requiring that, not later than thirty days after the date such contract is awarded, each contractor furnish proof to the Labor Commissioner that all employees performing manual labor on or in such public building, pursuant to such contract, have completed a course of at least ten hours in duration in construction safety and health approved by the federal Occupational Safety and Health Administration or, in the case of telecommunications employees, have completed at least ten hours of training in accordance with 29 CFR 1910.268.

(b) Any employee required to complete a construction safety and health course required under subsection (a) of this section who has not completed the course shall be subject to removal from the worksite if the employee does not provide documentation of having completed such course by the fifteenth day after the date the employee is found to be in noncompliance. The Labor Commissioner or said commissioner's designee shall enforce this section.

(c) Not later than January 1, 2007, the Labor Commissioner shall adopt regulations, in accordance with the provisions of chapter 54, to implement the provisions of subsections (a) and (b) of this section. Such regulations shall require that the ten-hour construction safety and health courses required under subsection (a) of this section be conducted in accordance with federal Occupational Safety and Health Administration Training Institute standards, or in accordance with 29 CFR 1910.268, as appropriate. The Labor Commissioner shall accept as sufficient proof of compliance with the provisions of subsection (a) or (b) of this section a student course completion card issued by the federal Occupational Safety and Health Administration Training Institute, or such other proof of compliance said commissioner deems appropriate, dated no earlier than five years before the commencement date of such public works project.

(d) For the purposes of this section, "public building" means a structure, paid for in whole or in part with state funds, within a roof and within exterior walls or fire walls, designed for the housing, shelter, enclosure and support or employment of people, animals or property of any kind, including, but not limited to, sewage treatment plants and water treatment plants, "Public building" does not include site work, roads or bridges, rail lines, parking lots or underground water, sewer or drainage systems including pump houses or other utility systems.

Certified Payroll Form WWS - CPI

Last Updated:
October 8, 2009

In accordance with Connecticut General Statutes, 31-53 Certified Payrolls with a statement of compliance shall be submitted monthly to the contracting agency.

Note: Once you have downloaded these forms and are ready to print them out, set the print function on your PC to the horizontal print orientation.

Note 2: Please download both the Payroll Certification for Public Works Projects **and** the Certified Statement of Compliance for a complete package. The Certified Statement of Compliance appears on the same page as the Fringe Benefits Explanation page.

Announcement: The Certified Payroll Form WWS-CPI can now be completed on-line!

- Certified Payroll Form WWS-CPI (PDF, 727KB)
- Sample Completed Form (PDF, 101KB)

Published by the Connecticut Department of Labor, Project Management Office

November 29, 2006

Notice

To All Mason Contractors and Interested Parties Regarding Construction Pursuant to Section 31-53 of the Connecticut General Statutes (Prevailing Wage)

The Connecticut Labor Department Wage and Workplace Standards Division is empowered to enforce the prevailing wage rates on projects covered by the above referenced statute.

Over the past few years the Division has withheld enforcement of the rate in effect for workers who operate a forklift on a prevailing wage rate project due to a potential jurisdictional dispute.

The rate listed in the schedules and in our Occupational Bulletin (see enclosed) has been as follows:

Forklift Operator:

- **Laborers (Group 4) Mason Tenders -** operates forklift solely to assist a mason to a maximum height of nine feet only.

- **Power Equipment Operator (Group 9) -** operates forklift to assist any trade and to assist a mason to a height over nine feet.

The U.S. Labor Department conducted a survey of rates in Connecticut but it has not been published and the rate in effect remains as outlined in the above Occupational Bulletin.

Since this is a classification matter and not one of jurisdiction, effective January 1, 2007 the Connecticut Labor Department will enforce the rate on each schedule in accordance with our statutory authority.

Your cooperation in filing appropriate and accurate certified payrolls is appreciated.

Revised: March 22, 2007

Informational Bulletin

Occupational Classifications

The Connecticut Department of Labor has the responsibility to properly determine "job classification" on prevailing wage projects covered under C.G.S. Section 31-53.

√ ***Note*:** *This information is intended to provide a sample of some occupational classifications for guidance purposes only. It is not an all-inclusive list of each occupation's duties. This list is being provided only to highlight some areas where a contractor may be unclear regarding the proper classification.*

Below are additional clarifications of specific job duties performed for certain classifications:

Asbestos Insulator:

- Handle, install, apply, fabricate, distribute, prepare, alter, repair, or dismantle heat and frost insulation, including penetration and fire stopping work on all penetration fire stop systems.

Carpenter:

- Assembly and installation of modular furniture/furniture systems.
  [**New**] a. Free-standing furniture is not covered. This includes: student chairs, study top desks, book box desks, computer furniture, dictionary stand, atlas stand, wood shelving, two- position information access station, file cabinets, storage cabinets, tables, etc.
- Applies fire stopping materials on fire resistive joint systems only.
- Installation of insulated material of all types whether blown, nailed or attached in other ways to walls, ceilings and floors of buildings.
- Installation of curtain/window walls only where attached to wood or metal studs.

Cleaning Laborer:

- The clean up of any construction debris and the general cleaning, including sweeping, wash down, mopping, wiping of the construction facility, washing, polishing, dusting, etc., prior to the issuance of a certificate of occupancy falls under the *Labor classification.*

Delivery Personnel: (Revised)

- If delivery of supplies/building materials is to one common point and stockpiled there, prevailing wages are not required. If the delivery personnel are involved in the distribution of the material to multiple locations within the construction site then they would have to be paid prevailing wages for the type of work performed: laborer, equipment operator, electrician, ironworker, plumber, etc.

- An example of this would be where delivery of drywall is made to a building and the delivery personnel distribute the drywall from one "stockpile" location to further sub-locations on each floor. Distribution of material around a construction site is the job of a laborer/tradesman and not a delivery personnel.

Continued

Electrician:

- Installation or maintenance of telecommunication, LAN wiring or computer equipment. Low voltage wiring.

Fork Lift Operator:

- Laborers Group 4) Mason Tenders - operates forklift solely to assist a mason to a maximum height of nine (9) feet only.
  Power Equipment Operator Group 9 - operates forklift to assist any trade, and to assist a mason to a height over nine (9) feet.

Glaziers:

- Installs light metal sash, head sills, and 2-story aluminum storefronts.
  Installation of aluminum window walls and curtain walls is the "joint" work of the Glaziers and Ironworkers classification which requires either a blended rate or equal composite workforce.

Ironworkers:

- Handling, sorting, and installation of reinforcing steel (rebar).
- Installation of aluminum window walls and curtain walls is the "joint" work of the Glaziers and Ironworkers classification which requires either a blended rate or equal composite workforce. Insulated metal and insulated composite panels are still installed by the Ironworker.
- Metal bridge rail (traffic), metal bridge handrail, and decorative security fence installation.

Insulator:

- Installing fire stopping systems/materials for "Penetration Firestop Systems": transit to cables, electrical conduits, insulated pipes, sprinkler pipe penetrations, ductwork behind radiation, electrical cable trays, fire rated pipe penetrations, natural polypropylene, HVAC ducts, plumbing bare metal, telephone and communication wires, and boiler room ceilings. Past practice using the applicable licensed trades, Plumber, Sheet Metal, Sprinkler Fitter, and Electrician, is not inconsistent with the Insulator classification and would be permitted.

Lead Paint Removal:

- Painter Rate -
  1) Removal of lead paint from bridges.
  2) Removal of lead paint as preparation of any surface to be repainted.
  3) Where removal is on a *Demolition* project prior to reconstruction.
- Laborer Rate-
  1) Removal of lead paint from any surface *NOT* to be repainted.
  2) Where removal is on a *TOTAL* Demolition project only.

Roofers:

- Preparation of surface, tear-off and/or removal of any type of roofing, and/or clean-up of any areas where a roof is to be relaid.

Continued

Sheet Metal Worker:

- Fabrication, handling, assembling, erecting, altering, repairing, etc. of coated metal material panels and composite metal material panels when used on building exteriors and interiors as soffits, facia, louvers, partitions, wall panel siding, canopies, cornice, column covers, awnings, beam covers, cladding, sun shades, lighting troughs, spires, ornamental roofing, metal ceilings, mansards, copings, ornamental and ventilation hoods, vertical and horizontal siding panels, trim, etc. The sheet metal classification also applies to the vast variety of coated metal material panels and composite metal material panels that have evolved over the years as an alternative to conventional ferrous and non-ferrous metals like steel, iron, tin, copper, brass, bronze, aluminum, etc. Insulated metal and insulated composite panels are still installed by the Iron Worker. Fabrication, handling, assembling, erecting, altering, repairing, etc. of architectural metal roof, standing seam roof, composite metal roof, metal and composite bathroom/toilet partitions, aluminum gutters, metal and composite lockers and shelving, kitchen equipment, and walk-in coolers

Truck Drivers:

- Truck Drivers delivering asphalt are covered under prevailing wage while on the site and directly involved in the paving operation.
- Material men and deliverymen are not covered under prevailing wage as long as they are not directly involved in the construction process. If, they unload the material, they would then be covered by prevailing wage for the classification they are performing work in: laborer, equipment operator, etc.
- Hauling material off site is not covered provided they are not dumping it at a location outlined above.
- Driving a truck on site and moving equipment or materials on site would be considered covered work, as this is part of the construction process.

Any questions regarding the proper classification should be directed to the Contract Compliance Unit, Wage and Workplace Standards Division, Connecticut Department of Labor, 200 Folly Brook Blvd, Wethersfield, CT 06109 at (860)263-6543.

Informational Bulletin

THE 10-HOUR OSHA CONSTRUCTION SAFETY AND HEALTH COURSE

(applicable to public building contracts entered into *on or after July 1, 2007,* where the total cost of all work to be performed is at least $100,000)

(1) This requirement was created by Public Act No. 06-175, which is codified in Section 31-53b of the Connecticut General Statutes (pertaining to the prevailing wage statutes);

(2) The course is required for public building construction contracts (projects funded in whole or in part by the state or any political subdivision of the state) entered into on or after July 1, 2007;

(3) It is required of private employees (not state or municipal employees) and apprentices who perform manual labor for a general contractor or subcontractor on a public building project where the total cost of all work to be performed is at least $100,000;

(4) The ten-hour construction course pertains to the ten-hour Outreach Course conducted in accordance with federal OSHA Training Institute standards, and, for telecommunications workers, a ten-hour training course conducted in accordance with federal OSHA standard, 29 CFR 1910.268;

(5) The internet website for the federal OSHA Training Institute is http://www.osha.gov/fso/ote/training/edcenters/fact_sheet.html;

(6) The statutory language leaves it to the contractor and its employees to determine who pays for the cost of the ten-hour Outreach Course;

(7) Within 30 days of receiving a contract award, a general contractor must furnish proof to the Labor Commissioner that all employees and apprentices performing manual labor on the project will have completed such a course;

(8) Proof of completion may be demonstrated through either: (a) the presentation of a *bona fide* student course completion card issued by the federal OSHA Training Institute; *or* (2) the presentation of documentation provided to an employee by a trainer certified by the Institute pending the actual issuance of the completion card;

(9) Any card with an issuance date more than 5 years prior to the commencement date of the construction project shall not constitute proof of compliance;

(10) Each employer shall affix a copy of the construction safety course completion card to the certified payroll submitted to the contracting agency in accordance with Conn. Gen. Stat. § 31-53(f) on which such employee's name first appears;

(11) Any employee found to be in non-compliance shall be subject to removal from the worksite if such employee does not provide satisfactory proof of course completion to the Labor Commissioner by the fifteenth day after the date the employee is determined to be in noncompliance;

(12) Any such employee who is determined to be in noncompliance may continue to work on a public building construction project for a maximum of fourteen consecutive calendar days while bringing his or her status into compliance;

(13) The Labor Commissioner may make complaint to the prosecuting authorities regarding any employer or agent of the employer, or officer or agent of the corporation who files a false certified payroll with respect to the status of an employee who is performing manual labor on a public building construction project;

(14) The statute provides the minimum standards required for the completion of a safety course by manual laborers on public construction contracts; any contractor can exceed these minimum requirements; and

(15) Regulations clarifying the statute are currently in the regulatory process, and shall be posted on the CTDOL website as soon as they are adopted in final form.

(16) Any questions regarding this statute may be directed to the Wage and Workplace Standards Division of the Connecticut Labor Department via the internet website of http://www.ctdol.state.ct.us/wgwkstnd/wgemenu.htm; or by telephone at (860)263-6790.

THE ABOVE INFORMATION IS PROVIDED EXCLUSIVELY AS AN EDUCATIONAL RESOURCE, AND IS NOT INTENDED AS A SUBSTITUTE FOR LEGAL INTERPRETATIONS WHICH MAY ULTMATELY ARISE CONCERNIG THE CONSTRUCTION OF THE STATUTE OR THE REGULATIONS.

Connecticut Department of Labor
Wage and Workplace Standards Division
FOOTNOTES

Please Note: If the "Benefits" listed on the schedule for the following occupations includes a letter(s) (+ a or + a+b for instance), refer to the information below.

Benefits to be paid at the appropriate prevailing wage rate for the listed occupation.

If the "Benefits" section for the occupation lists only a dollar amount, disregard the information below.

Bricklayers, Cement Masons, Cement Finishers, Concrete Finishers (including caulking), Stone Masons

(Building Construction) and

(Residential- Hartford, Middlesex, New Haven, New London and Tolland Counties)

a. Paid Holiday: Employees shall receive 4 hours for Christmas Eve holiday provided the employee works the regularly scheduled day before and after the holiday. Employers may schedule work on Christmas Eve and employees shall receive pay for actual hours worked in addition to holiday pay.

Bricklayer (Residential- Fairfield County)

a. Paid Holiday: If an employee works on Christmas Eve until noon he shall be paid for 8 hours.

Electricians

Fairfield County: West of the Five Mile River in Norwalk

a. $2.00 per hour not to exceed $14.00 per day.

Elevator Constructors: Mechanics

a. Paid Holidays: New Year's Day, Memorial Day, Independence Day, Labor Day, Veterans' Day, Thanksgiving Day, Christmas Day, plus the Friday after Thanksgiving.

b. Vacation: Employer contributes 8% of basic hourly rate for 5 years or more of service or 6% of basic hourly rate for 6 months to 5 years of service as vacation pay credit.

Glaziers

a. Paid Holidays: Labor Day and Christmas Day.

Power Equipment Operators
(Heavy and Highway Construction & Building Construction)

a. Paid Holidays: New Year's Day, Good Friday, Memorial day, Independence Day, Labor Day, Thanksgiving Day and Christmas Day, provided the employee works 3 days during the week in which the holiday falls, if scheduled, and if scheduled, the working day before and the working day after the holiday. Holidays falling on Saturday may be observed on Saturday, or if the employer so elects, on the preceding Friday.

Ironworkers

a. Paid Holiday: Labor Day provided employee has been on the payroll for the 5 consecutive work days prior to Labor Day.

Laborers (Tunnel Construction)

a. Paid Holidays: New Year's Day, Memorial Day, Independence Day, Labor Day, Thanksgiving Day and Christmas Day. No employee shall be eligible for holiday pay when he fails, without cause, to work the regular work day preceding the holiday or the regular work day following the holiday.

Roofers

a. Paid Holidays: July 4th, Labor Day, and Christmas Day provided the employee is employed 15 days prior to the holiday.

Sprinkler Fitters

a. Paid Holidays: Memorial Day, July 4th, Labor Day, Thanksgiving Day and Christmas Day, provided the employee has been in the employment of a contractor 20 working days prior to any such paid holiday.

Truck Drivers
(Heavy and Highway Construction & Building Construction)

a. Paid Holidays: New Year's Day, Memorial Day, Independence Day, Labor Day, Thanksgiving Day, Christmas day, and Good Friday, provided the employee has at least 31 calendar days of service and works the last scheduled day before and the first scheduled day after the holiday, unless excused.

Statute 31-55a

Last Updated: July 13, 2009

- Special Notice -

To All State and Political Subdivisions, Their Agents, and Contractors

Connecticut General Statute 31-55a - Annual adjustments to wage rates by contractors doing state work.

Each contractor that is awarded a contract on or after October 1, 2002, for (1) the construction of a state highway or bridge that falls under the provisions of section 31-54 of the general statutes, or (2) the construction, remodeling, refinishing, refurbishing, rehabilitation, alteration or repair of any public works project that falls under the provisions of section 31-53 of the general statutes shall contact the Labor Commissioner on or before July first of each year, for the duration of such contract, to ascertain the prevailing rate of wages on an hourly basis and the amount of payment or contributions paid or payable on behalf of each mechanic, laborer or worker employed upon the work contracted to be done, and shall make any necessary adjustments to such prevailing rate of wages and such payment or contributions paid or payable on behalf of each such employee, effective each July first.

- The prevailing wage rates applicable to any contract or subcontract awarded on or after October 1, 2002 are subject to annual adjustments each July 1st for the duration of any project which was originally advertised for bids on or after October 1, 2002.
- Each contractor affected by the above requirement shall pay the annual adjusted prevailing wage rate that is in effect each July 1st, as posted by the Department of Labor.
- It is the ***contractor's*** responsibility to obtain the annual adjusted prevailing wage rate increases directly from the Department of Labor's Web Site. The annual adjustments will be posted on the Department of Labor Web page: www.ctdol.state.ct.us. For those without internet access, please contact the division listed below.
- The Department of Labor will continue to issue the initial prevailing wage rate schedule to the Contracting Agency for the project. All subsequent annual adjustments will be posted on our Web Site for contractor access.

Any questions should be directed to the Contract Compliance Unit, Wage and Workplace Standards Division, Connecticut Department of Labor, 200 Folly Brook Blvd., Wethersfield, CT 06109 at (860)263-6790.

INVITATION TO BID
FCL-5

Jennifer K. Kelley

Purchasing Services Officer

860-679-1988

Telephone Number

STATE OF CONNECTICUT

UNIVERSITY OF CONNECTICUT HEALTH CENTER

FACILITY CONTRACTS & LEASES

263 Farmington Avenue, MC 4039

Farmington, CT 06032

THIS FORM AND REQUIRED PROPOSAL SCHEDULE FORMS MUST BE RETURNED

Read & Complete Carefully

BID NO: FCL-02-00111

COMMISSION ON HUMAN RIGHTS AND OPPORTUNITIES
CONTRACT COMPLIANCE REGULATIONS NOTIFICATION TO BIDDERS

The contract to be awarded is subject to contract compliance requirements mandated by Sections 4a-60 and 4a-60a of the Connecticut General Statutes; and, when the awarding agency is the State, Sections 46a-71(d) and 46a-81i(d) of the Connecticut General Statutes. There are Contract Compliance Regulations codified at Section 46a-68j-21 through 43 of the Regulations of Connecticut State Agencies, which establish a procedure for awarding all contracts covered by Sections 4a-60 and 46a-71(d) of the Connecticut General Statutes.

According to Section 46a-68j-30(9) of the Contract Compliance Regulations, every agency awarding a contract subject to the contract compliance requirements has an obligation to "aggressively solicit the participation of legitimate minority business enterprises as bidders, contractors, subcontractors and suppliers of materials." "Minority business enterprise" is defined in Section 4a-60 of the Connecticut General Statutes as a business wherein fifty-one percent or more of the capital stock, or assets belong to a person or persons: "(1) Who are active in daily affairs of the enterprise; (2) who have the power to direct the management and policies of the enterprise; and (3) who are members of a minority, as such term is defined in subsection (a) of Section 32-9n." "Minority" groups are defined in Section 32-9n of the Connecticut General Statutes as "(1) Black Americans . . . (2) Hispanic Americans . . . (3) persons who have origins in the Iberian Peninsula . . . (4)Women . . . (5) Asian Pacific Americans and Pacific Islanders; (6) American Indians . . ." An individual with a disability is also a minority business enterprise as provided by Section 4a-60g of the Connecticut General Statutes. The above definitions apply to the contract compliance requirements by virtue of Section 46a-68j-21(11) of the Contract Compliance Regulations.

The awarding agency will consider the following factors when reviewing the bidder's qualifications under the contract compliance requirements:

(a) the bidder's success in implementing an affirmative action plan;
(b) the bidder's success in developing an apprenticeship program complying with Sections 46a-68-1 to 46a-68-17 of the Administrative Regulations of Connecticut State Agencies, inclusive;
(c) the bidder's promise to develop and implement a successful affirmative action plan;
(d) the bidder's submission of employment statistics contained in the "Employment Information Form", indicating that the composition of its workforce is at or near parity when compared to the racial and sexual composition of the workforce in the relevant labor market area; and
(e) the bidder's promise to set aside a portion of the contract for legitimate minority business enterprises. See Section 46a-68j-30(10)(E) of the Contract Compliance Regulations.

INSTRUCTIONS AND OTHER INFORMATION

The following BIDDER CONTRACT COMPLIANCE MONITORING REPORT must be completed in full, signed, and submitted with the bid for this contract. The contract awarding agency and the Commission on Human Rights and Opportunities will use the information contained thereon to determine the bidders compliance to Sections 4a-60 and 4a-60a CONN. GEN. STAT., and Sections 46a-68j-23 of the Regulations of Connecticut State Agencies regarding equal employment opportunity, and the bidder's good faith efforts to include minority business enterprises as subcontractors and suppliers for the work of the contract.

1) **Definition of Small and Minority-Owned Contractor**

Section 4a-60g CONN. GEN. STAT. defines a small contractor as a company that has been doing business under the same management and control and has maintained its principal place of business in Connecticut for a one year period immediately prior to its application for certification under this section, had gross revenues not exceeding ten million dollars in the most recently completed fiscal year, and at least fifty-one percent of the ownership of which is held by a person or persons who are active in the daily affairs of the company, and have the power to direct the management and policies of the company, except that a nonprofit corporation shall be construed to be a small contractor if such nonprofit corporation meets the requirements of subparagraphs (A) and (B) of subdivision 4a-60g CONN. GEN. STAT.

2) Description of Job Categories (as used in Part IV Bidder Employment Information)

MANAGEMENT: Managers plan, organize, direct, and control the major functions of an organization through subordinates who are at the managerial or supervisory level. They make policy decisions and set objectives for the company or departments. They are not usually directly involved in production or providing services. Examples include top executives, public relations managers, managers of operations specialties (such as financial, human resources, or purchasing managers), and construction and engineering managers.

BUSINESS AND FINANCIAL OPERATIONS: These occupations include managers and professionals who work with the financial aspects of the business. These occupations include accountants and auditors, purchasing agents, management analysts, labor relations specialists, and budget, credit, and financial analysts.

MARKETING AND SALES: Occupations related to the act or process of buying and selling products and/or services such as sales engineer, retail sales workers and sales representatives including wholesale.

LEGAL OCCUPATIONS: In-House Counsel who is charged with providing legal advice and services in regards to legal issues that may arise during the course of standard business practices. This category also includes assistive legal occupations such as paralegals, legal assistants.

COMPUTER SPECIALISTS: Professionals responsible for the computer operations within a company are grouped in this category. Examples of job titles in this category include computer programmers, software engineers, database administrators, computer scientists, systems analysts, and computer support specialists

ARCHITECTURE AND ENGINEERING: Occupations related to architecture, surveying, engineering, and drafting are included in this category. Some of the job titles in this category include electrical and electronic engineers, surveyors, architects, drafters, mechanical engineers, materials engineers, mapping technicians, and civil engineers.

OFFICE AND ADMINISTRATIVE SUPPORT: All clerical-type work is included in this category. These jobs involve the preparing, transcribing, and preserving of written communications and records; collecting accounts; gathering and distributing information; operating office machines and electronic data processing equipment; and distributing mail. Job titles listed in this category include telephone operators, bill and account collectors, customer service representatives, dispatchers, secretaries and administrative assistants, computer operators and clerks (such as payroll, shipping, stock, mail and file).

BUILDING AND GROUNDS CLEANING AND MAINTENANCE: This category includes occupations involving landscaping, housekeeping, and janitorial services. Job titles found in this category include supervisors of landscaping or housekeeping, janitors, maids, grounds maintenance workers, and pest control workers.

CONSTRUCTION AND EXTRACTION: This category includes construction trades and related occupations. Job titles found in this category include boilermakers, masons (all types), carpenters, construction laborers, electricians, plumbers (and related trades), roofers, sheet metal workers, elevator installers, hazardous materials removal workers, paperhangers, and painters. Paving, surfacing, and tamping equipment operators; drywall and ceiling tile installers; and carpet, floor and tile installers and finishers are also included in this category. First line supervisors, foremen, and helpers in these trades are also grouped in this category..

INSTALLATION, MAINTENANCE AND REPAIR: Occupations involving the installation, maintenance, and repair of equipment are included in this group. Examples of job titles found here are heating, ac, and refrigeration mechanics and installers; telecommunication line installers and repairers; heavy vehicle and mobile equipment service technicians and mechanics; small engine mechanics; security and fire alarm systems installers; electric/electronic repair, industrial, utility and transportation equipment; millwrights; riggers; and manufactured building and mobile home installers. First line supervisors, foremen, and helpers for these jobs are also included in the category.

MATERIAL MOVING WORKERS: The job titles included in this group are Crane and tower operators; dredge, excavating, and lading machine operators; hoist and winch operators; industrial truck and tractor operators; cleaners of vehicles and equipment; laborers and freight, stock, and material movers, hand; machine feeders and offbearers; packers and packagers, hand; pumping station operators; refuse and recyclable material collectors; and miscellaneous material moving workers.

PRODUCTION WORKERS: The job titles included in this category are chemical production machine setters, operators and tenders; crushing/grinding workers; cutting workers; inspectors, testers sorters, samplers, weighers; precious stone/metal workers; painting workers; cementing/gluing machine operators and tenders; etchers/engravers; molders, shapers and casters except for metal and plastic; and production workers.

3) Definition of Racial and Ethnic Terms (as used in Part IV Bidder Employment Information)

White (not of Hispanic Origin)- All persons having origins in any of the original peoples of Europe, North Africa, or the Middle East.

Black (not of Hispanic Origin)- All persons having origins in any of the Black racial groups of Africa.

Hispanic- All persons of Mexican, Puerto Rican, Cuban, Central or South American, or other Spanish culture or origin, regardless of race.

Asian or Pacific Islander- All persons having origins in any of the original peoples of the Far East, Southeast Asia, the Indian subcontinent, or the Pacific Islands. This area includes China, India, Japan, Korea, the Philippine Islands, and Samoa.

American Indian or Alaskan Native- All persons having origins in any of the original peoples of North America, and who maintain cultural identification through tribal affiliation or community recognition.

BIDDER CONTRACT COMPLIANCE MONITORING REPORT

PART I - Bidder Information

Bid No. FCL-02-00111

Company Name: Street Address: City & State: Chief Executive:	Bidder Federal Employer Identification Number: Or Social Security Number:
Major Business Activity (brief description)	Bidder Identification (response optional/definitions on page 1) -Bidder is a small contractor: Yes ☐ No ☐ -Bidder is a minority business enterprise: Yes ☐ No ☐ (If yes, check ownership category) Black ☐ Hispanic ☐ Asian American ☐ American Indian/Alaskan Native ☐ Iberian Peninsula ☐ Individual(s) with a Physical Disability: ☐ Female: ☐ - Bidder is certified as above by State of CT Yes ☐ No ☐ - DAS Certification Number:
Bidder Parent Company (If any)	
Other Locations in Ct. (If any)	

PART II - Bidder Nondiscrimination Policies and Procedures

1. Does your company have a written Affirmative Action/Equal Employment Opportunity statement posted on company bulletin boards? Yes ☐ No ☐	7. Do all of your company contracts and purchase orders contain non-discrimination statements as required by Sections 4a-60 & 4a-60a Conn. Gen. Stat.? Yes ☐ No ☐
2. Does your company have the state-mandated sexual harassment prevention in the workplace policy posted on company bulletin boards? Yes ☐ No ☐	8. Do you, upon request, provide reasonable accommodation to employees, or applicants for employment, who have physical or mental disability? Yes ☐ No ☐
3. Do you notify all recruitment sources in writing of your company's Affirmative Action/Equal Employment Opportunity employment policy Yes ☐ No ☐	9. Does your company have a mandatory retirement age for all employees? Yes ☐ No ☐
4. Do your company advertisements contain a written statement that you are an Affirmative Action/Equal Opportunity Employer? Yes ☐ No ☐	10. If your company has 50 or more employees, have you provided at least two (2) hours of sexual harassment training to all of your supervisors? Yes ☐ No ☐ NA ☐
5. Do you notify the Ct. State Employment Service of all employment openings with your company? Yes ☐ No ☐	11. If your company has apprenticeship programs, do they meet the Affirmative Action/Equal Employment Opportunity requirements of the apprenticeship standards of the Ct. Dept. of Labor? Yes ☐ No ☐ NA ☐
6. Does your company have a collective bargaining agreement with workers? Yes ☐ No ☐ 6a. If yes, do the collective bargaining agreements contain non-discrimination clauses covering all workers? Yes ☐ No ☐ 6b. Have you notified each union in writing of your commitments under the nondiscrimination requirements of contracts with the state of Ct? Yes ☐ No ☐	12. Does your company have a written affirmative action Plan? Yes ☐ No ☐ If no, please explain. 13. Is there a person in your company who is responsible for equal employment opportunity? Yes ☐ No ☐ If yes, give name and phone number. _____

Part III - Bidder Subcontracting Practices

1. Will the work of this contract include subcontractors or suppliers? Yes ☐ No ☐

1a. If yes, please list all subcontractors and suppliers and report if they are a small contractor and/or a minority business enterprise. (defined on page 1 / use additional sheet if necessary)

1b. Will the work of this contract require additional subcontractors or suppliers other than those identified in 1a. above? Yes ☐ No ☐

PART IV - Bidder Employment Information Date: **BID No.: FCL-02-00111**

JOB CATEGORY *	OVERALL TOTALS	WHITE (not of Hispanic origin)		BLACK (not of Hispanic origin)		HISPANIC		ASIAN or PACIFIC ISLANDER		AMERICAN INDIAN or ALASKAN NATIVE	
		Male	Female	Male	Female	Male	Female	Male	Female	male	Female
Management											
Business & Financial Ops											
Marketing & Sales											
Legal Occupations											
Computer Specialists											
Architecture/Engineering											
Office & Admin Support											
Bldg/ Grounds Cleaning/Maintenance											
Construction & Extraction											
Installation , Maintenance & Repair											
Material Moving Workers											
Production Occupations											
TOTALS ABOVE											
Total One Year Ago											
FORMAL ON THE JOB TRAINEES (ENTER FIGURES FOR THE SAME CATEGORIES AS ARE SHOWN ABOVE)											
Apprentices											
Trainees											

*NOTE: JOB CATEGORIES CAN BE CHANGED OR ADDED TO (EX. SALES CAN BE ADDED OR REPLACE A CATEGORY NOT USED IN YOUR COMPANY)

PART V - Bidder Hiring and Recruitment Practices

1. Which of the following recruitment sources are used by you? (Check yes or no, and report percent used)

SOURCE	YES	NO	% of applicants provided by source
State Employment Service	☐	☐	
Private Employment Agencies	☐	☐	
Schools and Colleges	☐	☐	
Newspaper Advertisement	☐	☐	
Walk Ins	☐	☐	
Present Employees	☐	☐	
Labor Organizations	☐	☐	
Minority/Community Organizations	☐	☐	
Others (please identify)	☐	☐	
	☐	☐	
	☐	☐	

2. Check (X) any of the below listed requirements that you use as a hiring qualification (X)

☐	Work Experience
☐	Ability to Speak or Write English
☐	Written Tests
☐	High School Diploma
☐	College Degree
☐	Union Membership
☐	Personal Recommendation
☐	Height or Weight
☐	Car Ownership
☐	Arrest Record
☐	Wage Garnishments

3. Describe below any other practices or actions that you take which show that you hire, train, and promote employees without discrimination

Certification: (Read this form and check your statements on it CAREFULLY before signing). I certify that the statements made by me on this BIDDER CONTRACT COMPLIANCE MONITORING REPORT are complete and true to the best of my knowledge and belief, and are made in good faith. I understand that if I knowingly make any misstatements of facts, I am subject to be declared in non-compliance with Section 4a-60, 4a-60a, and related sections of the CONN. GEN. STAT.

(Signature)	(Title)	(Date Signed)	(Telephone)

INVITATION TO BID

FCL-6 Rev. 8/07
Previous Rev. 5/07

Jennifer K. Kelley
Purchasing Services Officer

860-679-1988
Telephone Number

STATE OF CONNECTICUT

UNIVERSITY OF CONNECTICUT HEALTH CENTER
FACILITY CONTRACTS & LEASES

263 Farmington Avenue, MC 4039
Farmington, CT 06032

Bid Number:
FCL-02-00111

State of Connecticut
Contract Affidavits, Certifications, and Notices

WHEN TO SUBMIT	CONTRACTING AFFIDAVITS/CERTIFICATION FORMS			
	Signed by AGENCY	Signed by CONTRACTOR		
		ALL Contracts	All Contracts Cost or value ≥ $50K	All Contracts Cost or value ≥ $500K
submit form **with** bid or proposal		NONDISCRIMINATION FORM (Individual or Contractor)	FORM 5*	FORM 6 **
submit form **at time of** contract execution	FORM 3	NONDISCRIMINATION FORM (Individual or Contractor)	FORM 1 FORM 5*	FORM 6 **
submit form **after** contract execution				FORM 6 **
submit form **annually** if multi-year contract			FORM 1	

* Form 5 is normally submitted by the contractor to the awarding State agency with the bid or proposal. However, for a sole source or no bid contract, it is submitted at the time of contract execution.

** Form 6 is normally submitted by the contractor to the awarding State agency with the bid or proposal. However, for a sole source or no bid contract, Form 6 is submitted at the time of contract execution. When applicable, Form 6 is also used by a subcontractor or consultant of the contractor. The subcontractor or consultant submits the form to the contractor, who then submits it to the awarding State agency. Depending on when the contractor engages the subcontractor or consultant, the contractor either submits the form at the time of contract execution or after contract execution.

For Further Information, Contact:
Please direct any questions about the ethics forms to Wanda Dupuy, (860) 418-6261, wanda.dupuy@ct.gov.

Form 1- Gift and Campaign Contribution Certification
This certification accompanies a State contract with a value of $50,000 or more in a calendar or fiscal year. The completed form is submitted by the contractor to the awarding State agency at the time of contract execution. The form is also used with a multi-year contract to update the initial certification on an annual basis.

Form 3- Certification of State Agency Official or Employee Authorized to Execute Contract
This certification accompanies a State contract with a value of $50,000 or more in a calendar or fiscal year. The completed form is

signed at the time of contract execution by the State agency official or employee authorized to execute the contract on behalf of the awarding State agency.

Form 5- Consulting Agreement Affidavit
This affidavit accompanies a State contract for the purchase of goods or services with a value of $50,000 or more in a calendar or fiscal year. Form 5 is normally submitted by the contractor to the awarding State agency with the bid or proposal. However, for a sole source or no bid contract, it is submitted at the time of contract execution.

Form 6- Affirmation of Receipt of State Ethics Laws Summary
This affirmation accompanies a large State construction contract or a large State procurement contract with a cost of more than $500,000. Form 6 is normally submitted by the contractor to the awarding State agency with the bid or proposal. However, for a sole source or no bid contract, Form 6 is submitted at the time of contract execution.
When applicable, Form 6 is also used by a subcontractor or consultant of the contractor. The subcontractor or consultant submits the form to the contractor, who then submits it to the awarding State agency.

PLAIN LANGUAGE SUMMARY OF STATE ETHICS LAWS FOR CURRENT AND POTENTIAL STATE CONTRACTORS
Note: The following is a summary of the major ethics laws and related provisions applicable to current and potential state contractors. For more detailed information or to discuss any questions you may have, contact the Office of State Ethics at (860) 566-4472.

I. RESTRICTIONS ON THE BENEFITS YOU MAY GIVE TO STATE PERSONNEL

GIFTS: In general, no one doing business with or seeking business from a state or quasi-public agency may give a gift to an official or employee of that agency. Connecticut's gift ban is strict, but has some exceptions. For example, under the Ethics Code, you may give: (1) food and drink up to $50 per person per year, if the person paying, or his or her representative, is in attendance; and (2) tangible gifts up to $10 per item up to $50 per person per year. Also exempt are certain items such as informational materials, or plaques costing less than $100. For a complete list of the Code's gift exceptions, consult Conn. Gen. Stat. § 1-79(e) or contact the Office of State Ethics.
IMPORTANT RECENT CHANGE IN LAW: As of December 9, 2004, gifts for "major life events," including a wedding or the birth of a child, which were previously exempt from the gift ban, are now subject to the strict gift limits outlined above if the gifts are provided by any individual or entity doing business with or seeking business from the state.
NOTE: State agencies may have stricter gift rules than the provisions of the Ethics Code (for example, an agency policy may ban all food and drink). Be sure to obtain a copy of the agency's ethics policy before you provide any benefit to an agency official/employee.
NECESSARY EXPENSES: Under the Ethics Code, you may not pay a fee or an honorarium to a state official or employee for making a speech or appearing at your organization's event. You may, however, under limited circumstances, pay the "necessary expenses" of such a state servant. These expenses are limited to: necessary travel, lodging for the nights before, or and after the speech, meals and conference fees. There may be reporting requirements attached to the giving and taking of necessary expenses, so contact the Office of State Ethics if you need more information. NOTE: Before providing necessary expenses, check with the state agency's ethics officer to determine if the agency allows such payments.
GIFTS TO THE STATE: The Ethics Code allows limited "gifts to the state" which facilitate state action or functions (for example, donating a piece of equipment to the agency).
NOTE: Recent legislation was passed that may impact gifts to the state. Please contact the Office of State Ethics before giving a gift to the state to determine if such donations are acceptable.

II. RULES ON HIRING STATE PERSONNEL

Before you hire a current or former state employee, you should be aware of certain provisions of the Ethics Code. First, if you are considering hiring a current state employee, especially from a state agency with which you do business or by which you are regulated, you should know the following:
A current state employee must not accept outside employment that impairs his independence of judgment regarding his state duties, or that encourages him to disclose confidential information learned in his state job. Also, a current state employee may not use his or her state position for financial gain, however inadvertent that use may be. Therefore, for example, a current state employee who exercises any contractual, supervisory or regulatory authority over you or your business may not be able to work for you.
Second, if you are considering hiring a former state employee, you should be aware of the Ethics Code's post-state employment, or revolving door, laws:
If you hire or otherwise engage the services of a former state official or employee, he or she may not represent you before his of her former agency for one year after leaving state service.
NOTE: The former State Ethics Commission established a limited exception to this provision which allows the former

employee to return to his or her former agency within the one year period for the sole purpose of providing technical expertise (for example, to help implement a previously awarded contract). This is a fact-specific exception that applies in very limited circumstances: therefore, you should contact the Office of State Ethics for further assistance if you think this exception applies to you.

If a state official or employee was substantially involved in, or supervised, the negotiation or award of a contract valued at $50,000 or more, and the contract was signed within his or her last year of state service, and you or your business was one of the parties to the contract, then you and/or your business are prohibited from hiring him or her for one year after he or she leaves state employment.

A former state official or employee can never represent anyone other than the state regarding a particular matter in which he or she was personally and substantially involved while in state service and in which the state has a substantial interest.

Third, there are approximately 75 state officials or employees who may not negotiate for, seek or accept employment with any business subject to regulation by their agency, and may not accept employment with such a business for one year after leaving state service. Under that section of the law, it is also illegal for a business in the industry to employ such an individual.

III. CONFLICT OF INTEREST RULES THAT APPLY TO YOU AS A STATE CONTRACTOR

Under Conn. Gen. Stat. §1-86e of the Ethics Code, no state contractor, including a consultant or other independent contractor, can use the authority provided under the contract, or confidential information acquired in the performance of the contract, to obtain financial gain for himself, his employee, or a member of his immediate family. Also, a state contractor cannot accept another state contract that would impair his independence of judgment in the performance of the first contract. Finally, a state contractor cannot accept anything of value based on an understanding that his actions on behalf of the state would be influenced.

It is important to call the Office of State Ethics at (860) 566-4472 to discuss the application of this law, or any of the other ethics laws, to your specific situation.

IV. OTHER ETHICS PROVISIONS THAT MAY APPLY TO YOU

Contractors seeking large state contracts are required to execute affidavits regarding gifts and/or campaign contributions made to certain state employees or public officials in the two-year period prior to the submission of a bid or proposal. You need to check the web sites of both the Department of Administrative Services, www.das.state.ct.us , and the Office of Policy and Management, www.opm.state.ct.us , for copies of these affidavits and for other updated information regarding state contractors. Also, because the particular agency with which you wish to contract may have specific rules that you must follow, you need to check with that agency as well.

If you or your business provides "investment services" as defined in the Code of Ethics, and you make a political contribution in connection with the Office of the Treasurer, you may be prohibited from contracting with that office. See Conn. Gen. Stat. § 1-84(n).

Finally, if you or your business spends or receives $2,000 or more in a calendar year for activities that constitute lobbying under the Ethics Code, whether to affect legislation or the actions of an administrative state agency, then you and/or your business may have to register as a lobbyist with the Office of State Ethics, and more ethics rules will apply to you. Contact the Office of State Ethics, or review the lobbyist registration information at www.ct.gov/ethics.

Recent legislation (Public Act 05-287) prohibits anyone who is a party (or who is seeking to become a party) to a state construction, procurement, or consultant services contract over $500,000 from:

(1) Soliciting information from a public official or state employee that is not available to other bidders for that contract, with the intent to obtain a competitive advantage over other bidders;

(2) intentionally or recklessly charging a state agency for work not performed or goods or services not provided, or falsifying invoices or bills; or

(3) intentionally violating or trying to circumvent the state competitive bidding and ethics laws.

Recent legislation (Public Act 05-287) also requires any prospective state contractor to affirm in writing that he or she has been provided with a summary of the state's ethics laws and that his key employees have read and understood the summary and agree to comply with the applicable provisions of the ethics law.

FORM 11 Campaign Contribution and Solicitation Ban

No state contractor, prospective state contractor, principal of a state contractor or principal of a prospective state contractor, with regard to a state contract or state contract solicitation with or from a state agency in the executive branch or a quasi-public agency or a holder, or principal of a holder of a valid prequalification certificate, shall make a contribution to, or solicit contributions on behalf of (i) an exploratory committee or candidate committee established by a candidate for nomination or election to the office of Governor, Lieutenant Governor, Attorney General, State Comptroller, Secretary of the State or State Treasurer, (ii) a political committee authorized to make contributions or expenditures to or for the benefit of such candidates, or (iii) a party committee;

In addition, no holder or principal of a holder of a valid prequalification certificate, shall make a contribution to, or solicit contributions on behalf of (i) an exploratory committee or candidate committee established by a candidate for nomination or election to the office of State senator or State representative, (ii) a political committee authorized to make contributions or expenditures to or for the benefit of such candidates, or (iii) a party committee.

Nondiscrimination Certification (AG Form)

The Office of the Attorney General created a nondiscrimination certification form (attached) to assist State agencies in complying with the State of Connecticut's current contracting requirement, pursuant to the Connecticut General Statutes § 4a-60(a)(1) and § 4a-60a(a)(1), as amended by Public Act 07-245 and Section 9(a)(1) and 10(a)(1) of Public Act 07-142. This certification is required for all State contracts, regardless of type, term, cost, or value. The revised CGS 4a-60 and 40-60a are included in their entirety below.

Sec. 4a-60. (Formerly Sec. 4-114a). Nondiscrimination and affirmative action provisions in contracts of the state and political subdivisions other than municipalities.

(a) Every contract to which the state or any political subdivision of the state other than a municipality is a party shall contain the following provisions: (1) The contractor agrees and warrants that in the performance of the contract such contractor will not discriminate or permit discrimination against any person or group of persons on the grounds of race, color, religious creed, age, marital status, national origin, ancestry, sex, mental retardation or physical disability, including, but not limited to, blindness, unless it is shown by such contractor that such disability prevents performance of the work involved, in any manner prohibited by the laws of the United States or of the state of Connecticut. The contractor further agrees to take affirmative action to insure that applicants with job-related qualifications are employed and that employees are treated when employed without regard to their race, color, religious creed, age, marital status, national origin, ancestry, sex, mental retardation, or physical disability, including, but not limited to, blindness, unless it is shown by such contractor that such disability prevents performance of the work involved; (2) the contractor agrees, in all solicitations or advertisements for employees placed by or on behalf of the contractor, to state that it is an "affirmative action-equal opportunity employer" in accordance with regulations adopted by the commission; (3) the contractor agrees to provide each labor union or representative of workers with which such contractor has a collective bargaining agreement or other contract or understanding and each vendor with which such contractor has a contract or understanding, a notice to be provided by the commission advising the labor union or workers' representative of the contractor's commitments under this section, and to post copies of the notice in conspicuous places available to employees and applicants for employment; (4) the contractor agrees to comply with each provision of this section and sections 46a-68e and 46a-68f and with each regulation or relevant order issued by said commission pursuant to sections 46a-56, <u>as amended by this act,</u> 46a-68e and 46a-68f; (5) the contractor agrees to provide the Commission on Human Rights and Opportunities with such information requested by the commission, and permit access to pertinent books, records and accounts, concerning the employment practices and procedures of the contractor as relate to the provisions of this section and section 46a-56<u>, as amended by this act</u>. If the contract is a public works contract, the contractor agrees and warrants that he will make good faith efforts to employ minority business enterprises as subcontractors and suppliers of materials on such public works project. <u>Prior to entering into the contract, the contractor shall provide the state or such political subdivision of the state with documentation in the form of a company or corporate policy adopted by resolution of the board of directors, shareholders, managers, members or other governing body of such contractor to support the nondiscrimination agreement and warranty under subdivision (1) of this subsection. For the purposes of this section, "contract" includes any extension or modification of the contract, and "contractor" includes any successors or assigns of the contractor.</u>

(b) For the purposes of this section, "minority business enterprise" means any small contractor or supplier of materials fifty-one per cent or more of the capital stock, if any, or assets of which is owned by a person or persons: (1) Who are active in the daily affairs of the enterprise, (2) who have the power to direct the management and policies of the enterprise and (3) who are members of a minority, as such term is defined in subsection (a) of section 32-9n; and "good faith" means that degree of diligence which a reasonable person would exercise in the performance of legal duties and obligations. "Good faith efforts" shall include, but not be limited to, those reasonable initial efforts necessary to comply with statutory or regulatory requirements and additional or substituted efforts when it is determined that such initial efforts will not be sufficient to comply with such requirements.

Sec. 4a-60a. Contracts of the state and political subdivisions, other than municipalities, to contain provisions re nondiscrimination on the basis of sexual orientation.

a) Every contract to which the state or any political subdivision of the state other than a municipality is a party shall contain the following provisions: (1) The contractor agrees and warrants that in the performance of the contract such contractor will not discriminate or permit discrimination against any person or group of persons on the grounds of sexual orientation, in any manner prohibited by the laws of the United States or of the state of Connecticut, and that employees are treated when employed without regard to their sexual orientation; (2) the contractor agrees to provide each labor union or representative of workers with which such contractor has a collective bargaining agreement or other contract or understanding and each vendor with which such contractor has a contract or understanding, a notice to be provided by the Commission on Human Rights and Opportunities advising the labor union or workers' representative of the contractor's commitments under this section, and to post copies of the notice in conspicuous places available to employees and applicants for employment; (3) the contractor agrees to comply with each provision of this section and with each regulation or relevant order issued by said commission pursuant to section 46a-56, as amended by this act; (4) the contractor agrees to provide the Commission on Human Rights and Opportunities with such information requested by the commission, and permit access to pertinent books, records and accounts, concerning the employment practices and procedures of the contractor which relate to the provisions of this section and section 46a-56, as amended by this act. Prior to entering into the contract, the contractor shall provide the state or such political subdivision of the state with documentation in the form of a company or corporate policy adopted by resolution of the board of directors, shareholders, managers, members or other governing body of such contractor to support the nondiscrimination agreement and warranty under subdivision (1) of this subsection. For the purposes of this section, "contract" includes any extension or modification of the contract, and "contractor" includes any successors or assigns of the contractor.

(b) The contractor shall include the provisions of subsection (a) of this section in every subcontract or purchase order entered into in order to fulfill any obligation of a contract with the state and such provisions shall be binding on a subcontractor, vendor or manufacturer unless exempted by regulations or orders of the commission. The contractor shall take such action with respect to any such subcontract or purchase order as the commission may direct as a means of enforcing such provisions including sanctions for noncompliance in accordance with section 46a-56; provided, if such contractor becomes involved in, or is threatened with, litigation with a subcontractor or vendor as a result of such direction by the commission, the contractor may request the state of Connecticut to enter into any such litigation or negotiation prior thereto to protect the interests of the state and the state may so enter.

STATE OF CONNECTICUT

GIFT AND CAMPAIGN CONTRIBUTION CERTIFICATION

Bid #FCL-02-00111

Certification to accompany a State contract with a value of $50,000 or more in a calendar or fiscal year, pursuant to C.G.S. §§ 4-250 and 4-252(c); Governor M. Jodi Rell's Executive Orders No. 1, Para. 8, and No. 7C, Para. 10; and C.G.S. §9-612(g)(2), as amended by Public Act 07-1

INSTRUCTIONS:

Complete all sections of the form. Attach additional pages, if necessary, to provide full disclosure about any lawful campaign contributions made to campaigns of candidates for statewide public office or the General Assembly, as described herein. Sign and date the form, under oath, in the presence of a Commissioner of the Superior Court or Notary Public. Submit the completed form to the awarding State agency at the time of initial contract execution (and on each anniversary date of a multi-year contract, if applicable).

CHECK ONE: ☐ Initial Certification ☐ Annual Update (Multi-year contracts only.)

GIFT CERTIFICATION:

As used in this certification, the following terms have the meaning set forth below:

1) "Contract" means that contract between the State of Connecticut (and/or one or more of it agencies or instrumentalities) and the Contractor, attached hereto, or as otherwise described by the awarding State agency below;
2) If this is an Initial Certification, "Execution Date" means the date the Contract is fully executed by, and becomes effective between, the parties; if this is an Annual Update, "Execution Date" means the date this certification is signed by the Contractor;
3) "Contractor" means the person, firm or corporation named as the contactor below;
4) "Applicable Public Official or State Employee" means any public official or state employee described in C.G.S. §4-252(c)(1)(i) or (ii);
5) **"Gift"** has the same meaning given that term in C.G.S. § 4-250(1);
6) "Planning Start Date" is the date the State agency began planning the project, services, procurement, lease or licensing arrangement covered by this Contract, as indicated by the awarding State agency below; and
7) "Principals or Key Personnel" means and refers to those principals and key personnel of the Contractor, and its or their agents, as described in C.G.S. §§ 4-250(5) and 4-252(c)(1)(B) and (C).

I, the undersigned, am the official authorized to execute the Contract on behalf of the Contractor. I hereby certify that, between the Planning Start Date and Execution Date, neither the Contractor nor any Principals or Key Personnel has made, will make (or has promised, or offered, to, or otherwise indicated that he, she or it will, make) any **Gifts** to any Applicable Public Official or State Employee.

I further certify that no Principals or Key Personnel know of any action by the Contractor to circumvent (or which would result in the circumvention of) the above certification regarding **Gifts** by providing for any other principals, key personnel, officials, or employees of the Contractor, or its or their agents, to make a **Gift** to any Applicable Public Official or State Employee. I further certify that the Contractor made the bid or proposal for the Contract without fraud or collusion with any person.

CAMPAIGN CONTRIBUTION CERTIFICATION:

I further certify that, on or after December 31, 2006, neither the Contractor nor any of its principals, as defined in C.G.S. § 9-612(g)(1), has made any **campaign contributions** to, or solicited any contributions on behalf of, any exploratory committee, candidate committee, political committee, or party committee established by, or supporting or authorized to support, any candidate for statewide public office, in violation of C.G.S. § 9-612(g)(2)(A). I further certify that **all lawful campaign contributions** that have been made on or after December 31, 2006 by the Contractor or any of its principals, as defined in C.G.S. § 9-612(g)(1), to, or solicited on behalf of, any exploratory committee, candidate committee, political committee, or party committee established by, or supporting or authorized to support any candidates for statewide public office or the General Assembly, are listed below:

STATE OF CONNECTICUT
GIFT AND CAMPAIGN CONTRIBUTION CERTIFICATION

Lawful Campaign Contributions to Candidates for Statewide Public Office:

Contribution Date	Name of Contributor	Recipient	Value	Description

Lawful Campaign Contributions to Candidates for the General Assembly:

Contribution Date	Name of Contributor	Recipient	Value	Description

Sworn as true to the best of my knowledge and belief, subject to the penalties of false statement.

_____ _____
Printed Contractor Name **Signature of Authorized Official**

Subscribed and acknowledged before me this _____ day of _____, 20___.

_____
Commissioner of the Superior Court (or Notary Public)

For State Agency Use Only

_____ _____
Awarding State Agency Planning Start Date

_____
Contract Number or Description

STATE OF CONNECTICUT
CONSULTING AGREEMENT AFFIDAVIT
Bid FCL-02-00111

Affidavit to accompany a State contract for the purchase of goods and services with a value of $50,000 or more in a calendar or fiscal year, pursuant to Connecticut General Statutes §§ 4a-81(a) and 4a-81(b)

INSTRUCTIONS:

If the bidder or vendor has entered into a consulting agreement, as defined by Connecticut General Statutes § 4a-81(b)(1): Complete all sections of the form. If the bidder or vendor has entered into more than one such consulting agreement, use a separate form for each agreement. Sign and date the form in the presence of a Commissioner of the Superior Court or Notary Public. **If the bidder or vendor has not entered into a consulting agreement, as defined by Connecticut General Statutes § 4a-81(b)(1):** Complete only the shaded section of the form. Sign and date the form in the presence of a Commissioner of the Superior Court or Notary Public.

Submit completed form to the awarding State agency with bid or proposal. For a sole source award, submit completed form to the awarding State agency at the time of contract execution.

This affidavit must be amended if the contractor enters into any new consulting agreement(s) during the term of the State contract.

AFFIDAVIT: [Number of Affidavits Sworn and Subscribed On This Day: _____]

I, the undersigned, hereby swear that I am the chief official of the bidder or vendor awarded a contract, as described in Connecticut General Statutes § 4a-81(a), or that I am the individual awarded such a contract who is authorized to execute such contract. I further swear that I have not entered into any consulting agreement in connection with such contract, **except for the agreement listed below**:

_____ _____
Consultant's Name and Title Name of Firm (if applicable)

_____ _____ _____
Start Date End Date Cost

Description of Services Provided: _____

_____

_____

Is the consultant a former State employee or former public official? ☐ YES ☐ NO

If YES: _____ _____
Name of Former State Agency Termination Date of Employment

Sworn as true to the best of my knowledge and belief, subject to the penalties of false statement.

_____ _____ _____
Printed Name of Bidder or Vendor **Signature of Chief Official or Individual** **Date**

_____ _____
Printed Name (of above) Awarding State Agency

Sworn and subscribed before me on this _____ day of _____, 20___.

_____
Commissioner of the Superior Court
or Notary Public

STATE OF CONNECTICUT

AFFIRMATION OF RECEIPT OF STATE ETHICS LAWS SUMMARY

Bid FCL-02-00111

Affirmation to accompany a large State construction or procurement contract, having a cost of more than $500,000, pursuant to Connecticut General Statutes §§ 1-101mm and 1-101qq

---

INSTRUCTIONS:

Complete all sections of the form. Submit completed form to the awarding State agency or contractor, as directed below.

CHECK ONE:

☐ I am a person seeking a large State construction or procurement contract. I am submitting this affirmation to the awarding State agency with my bid or proposal. [Check this box if the contract will be awarded through a competitive process.]

☐ I am a contractor who has been awarded a large State construction or procurement contract. I am submitting this affirmation to the awarding State agency at the time of contract execution. [Check this box if the contract was a sole source award.]

☐ I am a subcontractor or consultant of a contractor who has been awarded a large State construction or procurement contract. I am submitting this affirmation to the contractor.

IMPORTANT NOTE:

Contractors shall submit the affirmations of their subcontractors and consultants to the awarding State agency. Failure to submit such affirmations in a timely manner shall be cause for termination of the large State construction or procurement contract.

AFFIRMATION:

I, the undersigned person, contractor, subcontractor, consultant, or the duly authorized representative thereof, affirm (1) receipt of the summary of State ethics laws* developed by the Office of State Ethics pursuant to Connecticut General Statutes § 1-81b and (2) that key employees of such person, contractor, subcontractor, or consultant have read and understand the summary and agree to comply with its provisions.

* The summary of State ethics laws is available on the State of Connecticut's Office of State Ethics website at http://www.ct.gov/ethics/lib/ethics/contractors_guide_final2.pdf

_____ _____
Signature Date

_____ _____
Printed Name Title

_____
Firm or Corporation (if applicable)

_____ _____ ____ _____
Street Address City State Zip

_____
Awarding State Agency

SEEC FORM 11 (Bid FCL-02-00111)

NOTICE TO EXECUTIVE BRANCH STATE CONTRACTORS AND PROSPECTIVE STATE CONTRACTORS OF CAMPAIGN CONTRIBUTION AND SOLICITATION BAN

This notice is provided under the authority of Connecticut General Statutes 9-612(g)(2), as amended by P.A. 07-1, and is for the purpose of informing state contractors and prospective state contractors of the following law (italicized words are defined below):

Campaign Contribution and Solicitation Ban

No *state contractor, prospective state contractor, principal of a state contractor or principal of a prospective state contractor*, with regard to a *state contract* or *state contract solicitation* with or from a state agency in the executive branch or a quasi-public agency or a holder, or principal of a holder of a valid prequalification certificate, shall make a contribution to, or *solicit* contributions on behalf of (i) an exploratory committee or candidate committee established by a candidate for nomination or election to the office of Governor, Lieutenant Governor, Attorney General, State Comptroller, Secretary of the State or State Treasurer, (ii) a political committee authorized to make contributions or expenditures to or for the benefit of such candidates, or (iii) a party committee;

In addition, no holder or principal of a holder of a valid prequalification certificate, shall make a contribution to, or solicit contributions on behalf of (i) an exploratory committee or candidate committee established by a candidate for nomination or election to the office of State senator or State representative, (ii) a political committee authorized to make contributions or expenditures to or for the benefit of such candidates, or (iii) a party committee.

Duty to Inform

State contractors and prospective state contractors are required to inform their principals of the above prohibitions, as applicable, and the possible penalties and other consequences of any violation thereof.

Penalties for Violations

Contributions or solicitations of contributions made in violation of the above prohibitions may result in the following civil and criminal penalties:

Civil penalties--$2000 or twice the amount of the prohibited contribution, whichever is greater, against a principal or a contractor. Any state contractor or prospective state contractor which fails to make reasonable efforts to comply with the provisions requiring notice to its principals of these prohibitions and the possible consequences of their violations may also be subject to civil penalties of $2000 or twice the amount of the prohibited contributions made by their principals.

Criminal penalties—Any knowing and willful violation of the prohibition is a Class D felony, which may subject the violator to imprisonment of not more than 5 years, or $5000 in fines, or both.

Contract Consequences

Contributions made or solicited in violation of the above prohibitions may result, in the case of a state contractor, in the contract being voided.

Contributions made or solicited in violation of the above prohibitions, in the case of a prospective state contractor, shall result in the contract described in the state contract solicitation not being awarded to the prospective state contractor, unless the State Elections Enforcement Commission determines that mitigating circumstances exist concerning such violation.

The State will not award any other state contract to anyone found in violation of the above prohibitions for a period of one year after the election for which such contribution is made or solicited, unless the State Elections Enforcement Commission determines that mitigating circumstances exist concerning such violation.

Additional information and the entire text of P.A 07-1 may be found on the website of the State Elections Enforcement Commission, www.ct.gov/seec. Click on the link to "State Contractor Contribution Ban."

Definitions:

"State contractor" means a person, business entity or nonprofit organization that enters into a state contract. Such person, business entity or nonprofit organization shall be deemed to be a state contractor until December thirty-first of the year in which such contract terminates. "State contractor" does not include a municipality or any other political subdivision of the state, including any entities or associations duly created by the municipality or political subdivision exclusively amongst themselves to further any purpose authorized by statute or charter, or an employee in the executive or legislative branch of state government or a quasi-public agency, whether in the classified or unclassified service and full or part-time, and only in such person's capacity as a state or quasi-public agency employee.

"Prospective state contractor" means a person, business entity or nonprofit organization that (i) submits a response to a state contract solicitation by the state, a state agency or a quasi-public agency, or a proposal in response to a request for proposals by the state, a state agency or a quasi-public agency, until the contract has been entered into, or (ii) holds a valid prequalification certificate issued by the Commissioner of Administrative Services under section 4a-100. "Prospective state contractor" does not include a municipality or any other political subdivision of the state, including any entities or associations duly created by the municipality or political subdivision exclusively amongst themselves to further any purpose authorized by statute or charter, or an employee in the executive or legislative branch of state government or a quasi-public agency, whether in the classified or unclassified service and full or part-time, and only in such person's capacity as a state or quasi-public agency employee.

"Principal of a state contractor or prospective state contractor" means (i) any individual who is a member of the board of directors of, or has an ownership interest of five per cent or more in, a state contractor or prospective state contractor, which is a business entity, except for an individual who is a member of the board of directors of a nonprofit organization**,** (ii) an individual who is employed by a state contractor or prospective state contractor, which is a business entity, as president, treasurer or executive vice president, (iii) an individual who is the chief executive officer of a state contractor or prospective state contractor, which is not a business entity, or if a state contractor or prospective state contractor has no such officer, then the officer who duly possesses comparable powers and duties, (iv) an officer or an employee of any state contractor or prospective state contractor who has *managerial or discretionary responsibilities with respect to a state contract,* (v) the spouse or a *dependent child* who is eighteen years of age or older of an individual described in this subparagraph, or (vi) a political committee established or controlled by an individual described in this subparagraph or the business entity or nonprofit organization that is the state contractor or prospective state contractor.

"State contract" means an agreement or contract with the state or any state agency or any quasi-public agency, let through a procurement process or otherwise, having a value of fifty thousand dollars or more, or a combination or series of such agreements or contracts having a value of one hundred thousand dollars or more in a calendar year, for (i) the rendition of services, (ii) the furnishing of any goods, material, supplies, equipment or any items of any kind, (iii) the construction, alteration or repair of any public building or public work, (iv) the acquisition, sale or lease of any land or building, (v) a licensing arrangement, or (vi) a grant, loan or loan guarantee. "State contract" does not include any agreement or contract with the state, any state agency or any quasi-public agency that is exclusively federally funded, an education loan or a loan to an individual for other than commercial purposes.

"State contract solicitation" means a request by a state agency or quasi-public agency, in whatever form issued, including, but not limited to, an invitation to bid, request for proposals, request for information or request for quotes, inviting bids, quotes or other types of submittals, through a competitive procurement process or another process authorized by law waiving competitive procurement.

“Managerial or discretionary responsibilities with respect to a state contract” means having direct, extensive and substantive responsibilities with respect to the negotiation of the state contract and not peripheral, clerical or ministerial responsibilities.

“Dependent child” means a child residing in an individual’s household who may legally be claimed as a dependent on the federal income tax of such individual.

“Solicit” means (A) requesting that a contribution be made, (B) participating in any fund-raising activities for a candidate committee, exploratory committee, political committee or party committee, including, but not limited to, forwarding tickets to potential contributors, receiving contributions for transmission to any such committee or bundling contributions, (C) serving as chairperson, treasurer or deputy treasurer of any such committee, or (D) establishing a political committee for the sole purpose of soliciting or receiving contributions for any committee. Solicit does not include: (i) making a contribution that is otherwise permitted by Chapter 155 of the Connecticut General Statutes; (ii) informing any person of a position taken by a candidate for public office or a public official, (iii) notifying the person of any activities of, or contact information for, any candidate for public office; or (iv) serving as a member in any party committee or as an officer of such committee that is not otherwise prohibited in this section.

STATE OF CONNECTICUT
NONDISCRIMINATION CERTIFICATION
Affidavit By Entity – Bid FCL-02-00111
For Contracts Valued at $50,000 or More

Documentation in the form of an affidavit signed under penalty of false statement by a chief executive officer, president, chairperson, member, or other corporate officer duly authorized to adopt corporate, company, or partnership policy that certifies the contractor complies with the nondiscrimination agreements and warranties under Connecticut General Statutes §§ 4a-60(a)(1) and 4a-60a(a)(1), as amended

INSTRUCTIONS:
For use by an entity (corporation, limited liability company, or partnership) when entering into any contract type with the State of Connecticut valued at $50,000 or more for any year of the contract. Complete all sections of the form. Sign form in the presence of a Commissioner of Superior Court or Notary Public. Submit to the awarding State agency prior to contract execution.

AFFIDAVIT:

I, the undersigned, am over the age of eighteen (18) and understand and appreciate the obligations of

an oath. I am _____ of _____ , an entity
Signatory's Title Name of Entity

duly formed and existing under the laws of _____.
Name of State or Commonwealth

I certify that I am authorized to execute and deliver this affidavit on behalf of

_____ and that _____
Name of Entity Name of Entity

has a policy in place that complies with the nondiscrimination agreements and warranties of Connecticut

General Statutes §§ 4a-60(a)(1)and 4a-60a(a)(1), as amended.

_____
Authorized Signatory

_____
Printed Name

Sworn and subscribed to before me on this _____ day of _____, 20___.

_____ _____
Commissioner of the Superior Court/ Notary Public **Commission Expiration Date**